Miele

Operating instructions

Cordless stick vacuum cleaner

en-GB

HS19

M.-Nr. 11 419 150

Contents

Warning and Safety instructions 4

Caring for the environment 11

Guide to the appliance 12
Installation and connection 14
Assembling the vacuum cleaner 14
Connecting the Comfort handle 15
Connecting the PowerUnit and the suction tube 15
Inserting the battery 16
Connecting the Electrobrush 17
General battery information 17
Charging the battery (without wall mounting) 18
Charging the battery (with wall mounting) 18
Wall mounting 19
Attaching the mounting plate 20
Connecting the accessories holder (if required) 20
Connecting the wall bracket 21
Battery charging state indicator (while charging) 21
Battery charging state indicator (while in use) 22

Using the accessories supplied 22
Electrobrush Multi Floor XXL (SEB 430 or SEB 435) 23
Electro Compact handheld brush (SEB 23) 23
Additional AP01 battery and LS03 charger cradle 23

Use 24
Switching on and off 24
Regulating the suction power 24
Illuminating the work area 25
Self-standing function for short pauses in vacuuming 25

Maintenance 25
Emptying the dust container 25
Cleaning the fine dust filter 27
Cleaning the pre-filter 27
Cleaning the dust container 29
Cleaning the Electrobrush/handheld brush 29
Replacing the rechargeable battery 30

Problem solving guide 31

Error messages 33

Cleaning and care 34

Contents

Service 34
Contact in case of malfunction 34
Warranty 34
Warranty in the UAE 34

Optional accessories 35
Purchasing accessories 35

Electrical connection for the UK 36

This vacuum cleaner conforms to current safety requirements. Inappropriate use can lead to personal injury and damage to property.

Please read the operating instructions before using the vacuum cleaner and charging the battery for the first time. They contain important information on the safety, use and maintenance of the vacuum cleaner. This will prevent both personal injury and damage to the appliance.

In accordance with standard IEC 60335-1, Miele expressly and strongly advises that you read and follow the instructions in the “Installation and connection” chapter as well as the safety instructions and warnings.

Miele cannot be held liable for injury or damage caused by non-compliance with these instructions.

Keep these operating instructions in a safe place and pass them on to any future owner.

Always disconnect the vacuum cleaner from the power supply when you have finished using it, before changing any accessories, as well as for maintenance work, cleaning and troubleshooting. Use the On/Off switch on the Comfort handle to do this.

Correct application

▶ This vacuum cleaner is intended for cleaning flooring in domestic households and similar residential environments. This vacuum cleaner is not suitable for use on construction sites.

▶ This vacuum cleaner is not intended for outdoor use.

▶ This vacuum cleaner can be used for all normal cleaning of carpets, rugs and robust hard flooring.

▶ This vacuum cleaner is intended for use at altitudes of up to 4000 m above sea level.

▶ The vacuum cleaner must only be used to vacuum dry floor surfaces. Do not vacuum people or animals. Any other types of use, modifications or alterations are not permitted.

▶ This vacuum cleaner can only be used by people with reduced physical, sensory or mental capabilities, or lack of experience or knowledge, if they are supervised whilst using it or have been shown how to use it in a safe way and understand and recognise the consequences of incorrect operation.

▶ The packaging material protects the vacuum cleaner from transport damage. We recommend you keep the packaging for transport purposes.

Safety with children

▶ Children under 8 years of age must be kept away from the vacuum cleaner unless they are constantly supervised.

▶ Children aged 8 and older may only use the vacuum cleaner without supervision if they have been shown how to use it in a safe manner. Children must be able to understand and recognise the possible dangers caused by incorrect operation.

▶ Children must not be allowed to clean or maintain the vacuum cleaner unsupervised.

▶ Please supervise children in the vicinity of the vacuum cleaner and do not let them play with it.

▶ Danger of suffocation. Packaging, e.g. plastic wrappings, must be kept out of the reach of babies and children. Whilst playing, children could become entangled in packaging or pull it over their head and suffocate.

Technical safety

▶ The vacuum cleaner operates at 25.2 V.

It is classified as a class III appliance.
This appliance is supplied by a safety extra-low voltage (SELV) power source where the voltage is low enough to protect users from the risk of electrical shock. A Class II charger is used for supplying power to charge the vacuum cleaner.

▶ Before using the vacuum cleaner and its accessories, check for any visible signs of damage. Do not use a damaged appliance.

▶ Compare the connection data on the data plate of the charger (voltage and frequency) with that of the mains electricity supply. This data must match exactly. Without modifications, the charger is suitable for 50 Hz and 60 Hz.

▶ The mains electrical plug must be fitted with an appropriate fuse.

▶ The Miele Multi Floor XXL Electrobrush and the Miele Electro Compact handheld brush (varies according to the model) are additional motor-driven devices designed specially for this Miele vacuum cleaner. For safety reasons, the vacuum cleaner must not be used with a different Miele Electrobrush/handheld brush or an Electrobrush/handheld brush produced by another manufacturer.

▶ Store the vacuum cleaner at an ambient temperature between 0 °C and 45 °C.

▶ While the vacuum cleaner is under warranty, repairs should only be undertaken by a Miele authorised service technician. Otherwise the warranty will be invalidated.

▶ Repairs should only be carried out by a Miele authorised service technician. Repairs and other work by unqualified persons can cause considerable danger to users.

▶ Miele can only guarantee the safety of the appliance when genuine Miele replacement parts are used. Faulty components must only be replaced with genuine Miele replacement parts.

Cleaning

▶ Do not immerse the vacuum cleaner or any accessories supplied with it in water.

▶ The Electrobrush/handheld brush (depending on the model), the PowerUnit, the suction tube, the body and the Comfort handle contain electrical wires. The plug connectors must not come into contact with water. Danger of electric shock. They should only be cleaned with a dry cloth.

▶ Clean the vacuum cleaner and accessories only with a dry or slightly damp cloth when disconnected from the power supply. Exception:

- Dust container: empty the dust container and remove the pre-filter. Clean the dust container using water and mild washing-up liquid only. Then dry the dust container carefully. Replace the pre-filter in the dust container.

Correct use

▶ Do not use the vacuum cleaner without the dust container, pre-filter, fine dust filter and motor protection filter fitted.

▶ Do not vacuum up anything which has been burning or is still glowing e.g. cigarettes, ashes or coal, whether glowing or apparently extinguished.

▶ Do not use the vacuum cleaner to vacuum up any water, liquid or damp dirt. Wait until any freshly cleaned or shampooed rugs or carpets are completely dry before attempting to vacuum.

▶ Do not use the vacuum cleaner to vacuum toner dust. Toner, such as that used in printers and photocopiers, can conduct electricity.

▶ Do not vacuum up any inflammable or combustible liquids or gases and do not vacuum in areas where such substances are stored.

▶ Never touch the Electrobrush/handheld brush (varies according to the model) while it is rotating.

▶ Do not use the Electrobrush/handheld brush (varies according to the model) at head height.

▶ Do not vacuum at head height and do not let the suction get anywhere near a person's head.

Accessories

▶ Only use genuine accessories with the “ORIGINAL Miele” logo on the packaging. The manufacturer cannot otherwise guarantee the safety of the product.

Safety instructions and warnings for AP01 battery, LG01 charger, LS03 charger cradle (depending on the model)

Safety with children

▶ People (including children) with reduced physical, sensory or mental capabilities, or lack of experience or knowledge, who are unable to use the LG01 charger/LS03 charger cradle safely may only use this vacuum cleaner if they are supervised whilst using it or have been shown how to use it in a safe way and understand and recognise the consequences of incorrect operation.

▶ Keep the AP01 battery out of the reach of children.

▶ Children must be kept away from the LG01 charger/LS03 charger cradle unless they are constantly supervised.

Technical safety

▶ The AP01 battery, the LG01 charger and the LS03 charger cradle are designed for use with the Miele HS19 vacuum cleaner. For safety reasons, the vacuum cleaner must not be used with a battery, charger or charger cradle produced by another manufacturer.

▶ Only the LG01/**xx** charger or the LS03/**xx** charger cradle supplied with the vacuum cleaner can be used to charge the AP01 battery. Do not use the LG01/**xx** charger or LS03/**xx** charger cradle to charge any other batteries.
xx stands for 01, 02, 03, 04, 05, 06, 07 or 08; these numbers identify the country version of your LG01 charger and your LS03 charger cradle:

XX	
01	AT, BE, BG, CH, CL, CZ, DE, DK, EE, ES, FI, FR, GR, HR, HU, IT, KZ, LT, LU, LV, NL, NO, PL, PT, RO, RS, RU, SE, SI, SK, TR, UA, ZA
02	AE, GB, HK, IE, MY, SG
03	CA, MX, US
04	AU, NZ
05	CN
06	KR
07	JP
08	IN

▶ If you are using a mains plug adapter, make sure that it is approved for continuous operation.

▶ Reliable and safe operation of this vacuum cleaner can only be assured if the LG01 charger/LS03 charger cradle has been connected to the mains electricity supply.

▶ Charge the vacuum cleaner at an ambient temperature between 0 °C and 45 °C. During charging, the AP01 battery must be placed in a well ventilated area.

▶ Stop using the AP01 battery immediately if you notice an unusual smell from it, if liquid is leaking from it, if it is significantly overheating or if it is discoloured or deformed. Dispose of the AP01 battery immediately (see safety notice “Disposing of the AP01 battery” at the end of this chapter as well as “Caring for the environment” – “Disposing of old batteries”).

▶ Batteries will deplete over time. They can then leak corrosive fluids. Avoid contact with the eyes and skin. In the event of contact, rinse thoroughly with water and seek medical advice.

▶ Please contact Miele Service before sending the AP01 battery.

Correct use

▶ Do not drop or throw the AP01 battery. For safety reasons, do not continue to use an AP01 battery which has been damaged.

▶ Keep the AP01 battery away from naked flames or other heat sources. Do not heat the AP01 battery. Do not expose the rechargeable battery to direct sunlight.

▶ Do not dismantle the AP01 battery.

▶ Do not cause a short circuit by bridging the contacts of the AP01 battery, either unintentionally or deliberately.

▶ Do not allow the AP01 battery to come into contact with liquids.

▶ Disposing of the AP01 battery: remove the AP01 battery from the vacuum cleaner. Insulate the metal contacts with adhesive tape to prevent short circuits. Dispose of the AP01 battery in a municipal recycling facility. Do not dispose of the AP01 battery with your household waste.

Disposal of the packing material

The packaging is designed to protect the appliance from damage during transportation. The packaging materials used are selected from materials which are environmentally friendly for disposal and should be recycled.

Recycling the packaging reduces the use of raw materials in the manufacturing process and also reduces the amount of waste in landfill sites.

Disposing of your old appliance

Before disposing of your old vacuum cleaner, remove the fine dust filter and dispose of it with your household waste.

Electronic and electrical appliances contain many valuable materials. They also contain certain materials, compounds and components which were essential for their correct functioning and safety. These could be hazardous to your health and to the environment if disposed of with general waste or if handled incorrectly. Please do not, therefore, dispose of your old vacuum cleaner with your household waste.

Instead, please make use of officially designated collection and disposal points to dispose of and recycle electrical and electronic appliances in your local community, with your dealer or with Miele. Ensure that it presents no danger to children while being stored for disposal.

Disposing of old batteries

In many cases, electrical and electronic appliances contain batteries which must not be disposed of with household waste after use. You are legally obliged (depending on country) to remove any old batteries which are not securely enclosed by the vacuum cleaner and to take them to a suitable collection point (e.g. retailer) where they can be handed in free of charge. Insulate the metal contacts with adhesive tape to prevent short circuits. Batteries may contain substances which can be hazardous to human health and the environment.

The labelling on the battery will provide further information. The bin symbol with a cross through it means that the batteries must not be disposed of in household waste. A bin with a cross through it which also has one or more chemical symbols on it indicates that the battery contains lead (Pb), cadmium (Cd) and/or mercury (Hg).

Old batteries contain valuable raw materials which can be recycled. Disposing of batteries separately makes them easier to handle and recycle.

Guide to the appliance

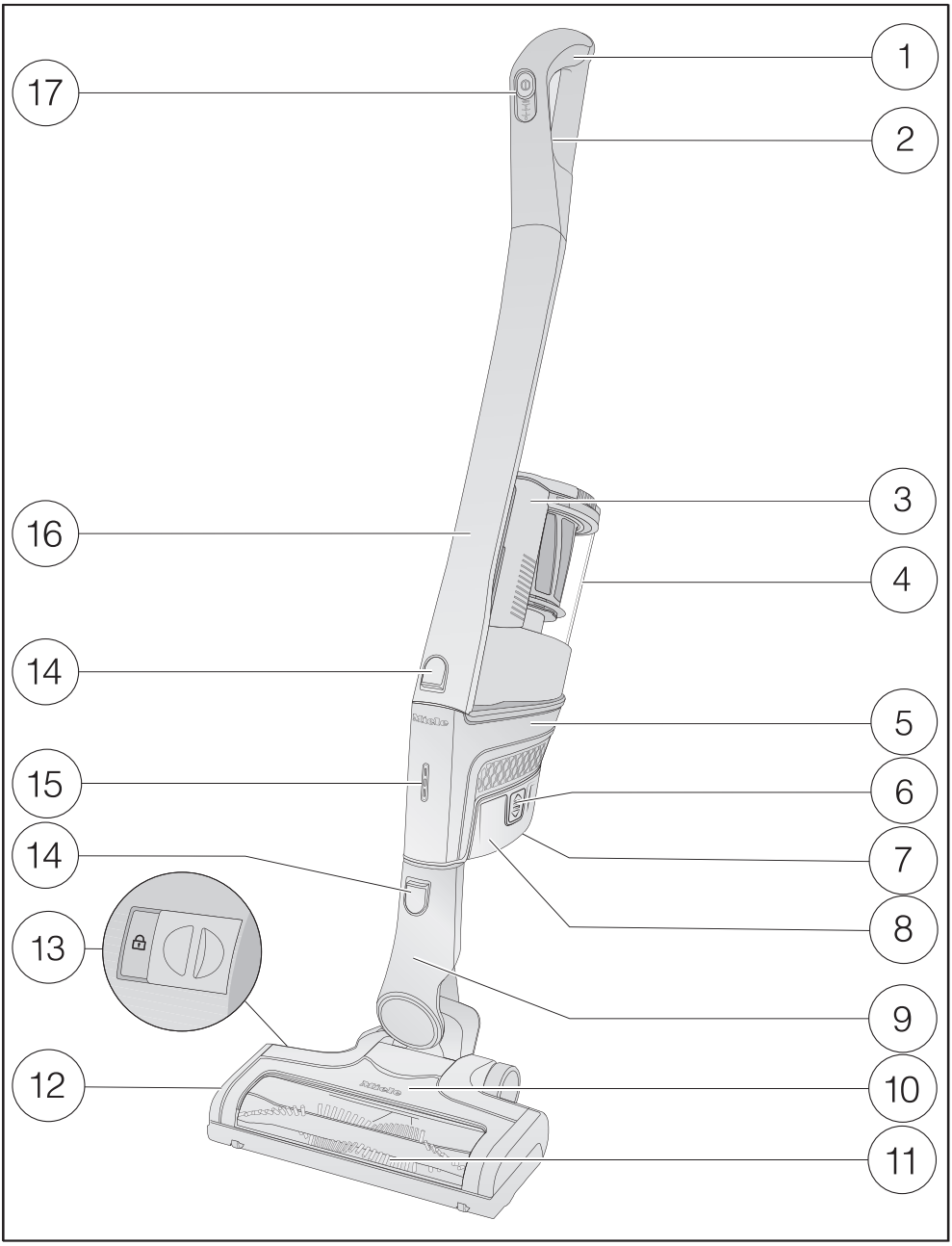

① Comfort handle

② Release catch for Comfort handle (on the back)

③ Dust container handle

④ Dust container with pre-filter, fine dust filter and motor protection filter

⑤ PowerUnit with battery connection and connections for Comfort handle, suction tube, Electrobrush and dust container

⑥ Release catches for battery (on both sides of the battery)

⑦ Charging socket (at the bottom of the battery)

⑧ AP01 lithium-ion battery

⑨ Connector

⑩ Multi Floor XXL Electrobrush (some models feature BrilliantLight lighting)

⑪ Removable roller brush

⑫ Flap

⑬ Release catch for removing the roller brush

⑭ Release catches

⑮ Battery charging state indicator

⑯ Suction tube

⑰ On/Off switch with suction power selector

Installation and connection

Assembling the vacuum cleaner

You can assemble the vacuum cleaner in 2 different ways.

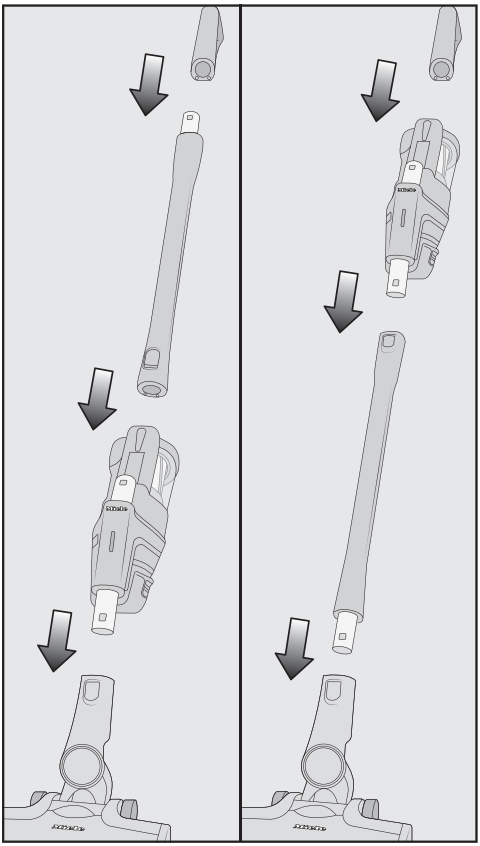

■ You can place the suction tube either above or below the PowerUnit.

The advantages of placing the **PowerUnit at the bottom** of the vacuum cleaner are as follows:
- secure self-standing function possible (see “Use” – “Self-standing function for short pauses in vacuuming”)
- ergonomic (reduced strain on the wrist)
- convenient cleaning of large surfaces

The advantages of placing the **PowerUnit at the top** of the vacuum cleaner are as follows:
- convenient cleaning underneath furniture
- PowerUnit can be removed quickly

PowerUnit solo

The PowerUnit can be used on its own without the suction tube and Electrobrush as a quick way of vacuuming up crumbs and lint in specific areas.

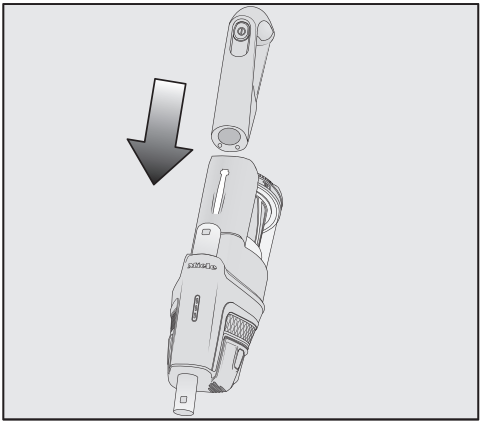

Tip: This configuration is particularly suitable when using the three-piece accessory set (see “Using the accessories supplied”).

Connecting the Comfort handle

Depending on how your vacuum cleaner is configured, you can connect the Comfort handle to either the suction tube or the PowerUnit.

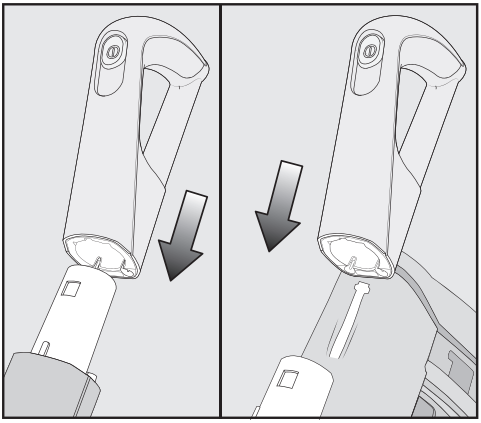

- Push the Comfort handle down on to the suction tube connector from above until it audibly clicks into place (left image detail).
- Slide the Comfort handle along the guide line on the dust container handle and down on to the PowerUnit connector from above until it audibly clicks into place (right image detail).
- Switch off the vacuum cleaner using the On/Off switch on the front of the Comfort handle before separating the sections.

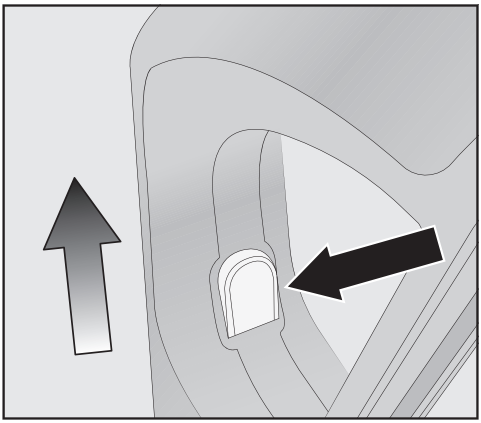

- Press the release catch and remove the Comfort handle by pulling upwards.

Connecting the PowerUnit and the suction tube

Depending on how your vacuum cleaner is configured, the suction tube is located either above or below the PowerUnit.

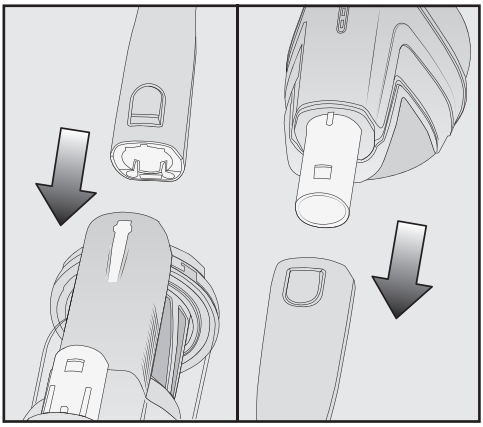

- Slide the suction tube along the guide line on the dust container handle and down on to the PowerUnit connector from above until it audibly clicks into place (left image detail).

- Push the PowerUnit connector down on to the suction tube from above until it audibly clicks into place (right image detail).

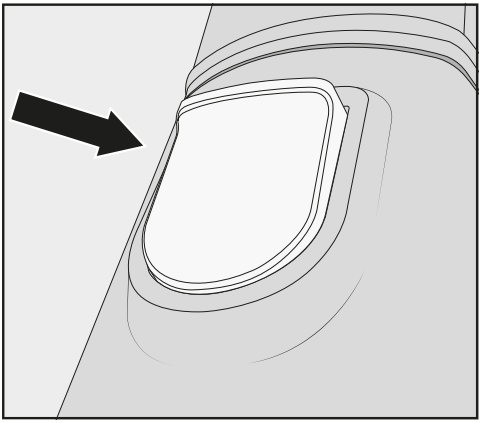

- Press the release catch to separate the individual sections from each other.

Inserting the battery

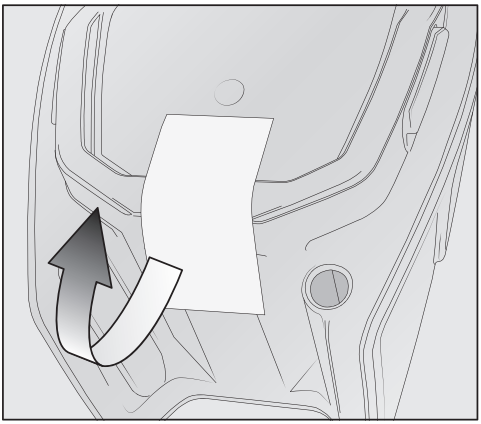

- Remove the protective sticker from the battery.

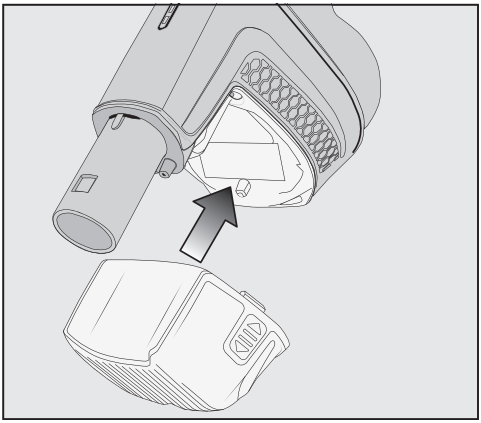

- Push the battery along the guide lines until it audibly clicks into place in the PowerUnit.

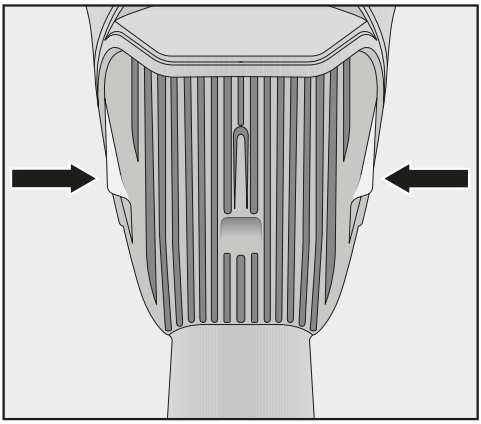

- If you want to separate the sections again, press both release catches at the side of the battery to remove the battery.

Connecting the Electrobrush

Depending on how your vacuum cleaner is configured, you can connect either the PowerUnit connector or the suction tube connector to the Electrobrush.

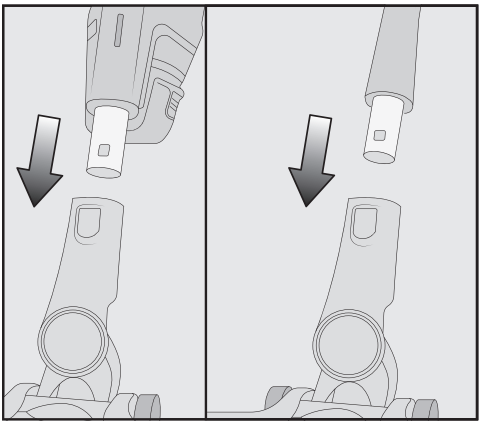

- Insert the connector down into the Electrobrush from above until it audibly clicks into place.

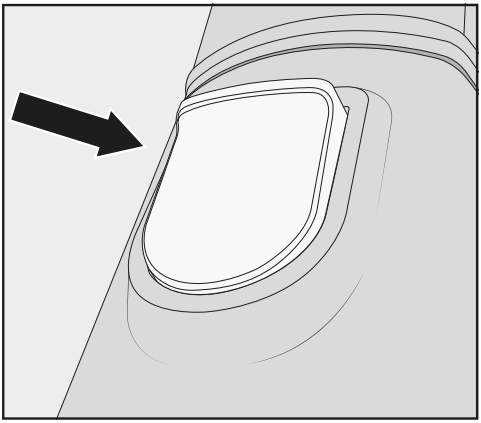

- To separate the individual sections from each other, press the release catch on the Electrobrush and pull the connector out of the Electrobrush.

General battery information

The rechargeable battery is supplied not fully charged.
Charge the battery completely before using it for the first time. Allow approximately 4 hours for this.

It is essential to charge the battery for the first time in the PowerUnit in order to activate maximum power in the battery.

Once the battery is fully charged, the battery charging state indicator switches off after 10 minutes to conserve energy.

You can use the vacuum cleaner for up to 14 minutes if you are using it in its fully assembled state at the maximum power level.
If, however, you are using the PowerUnit on its own and select the lowest power level, you can vacuum for up to 60 minutes.

Charging the battery (without wall mounting)

You can store the vacuum cleaner upright and charge the battery directly.

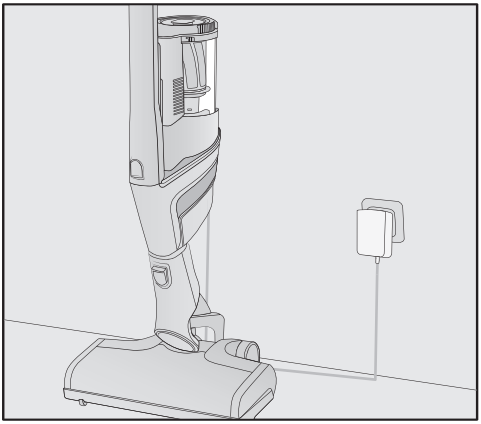

- Connect the PowerUnit to the Electrobrush to provide a secure base for the vacuum cleaner.
- Swing the vacuum cleaner forwards until the Electrobrush connector audibly clicks into place.
- Plug the supplied charging cable into the charging socket on the bottom of the battery.
- Plug the charger into a power socket.

The charging process will start.

You can read more about this in “Battery charging state indicator”.

Charging the battery (with wall mounting)

There are 2 ways to store and charge the vacuum cleaner in the supplied wall bracket.

You will need a suitable location near a free power socket for mounting the appliance on the wall.

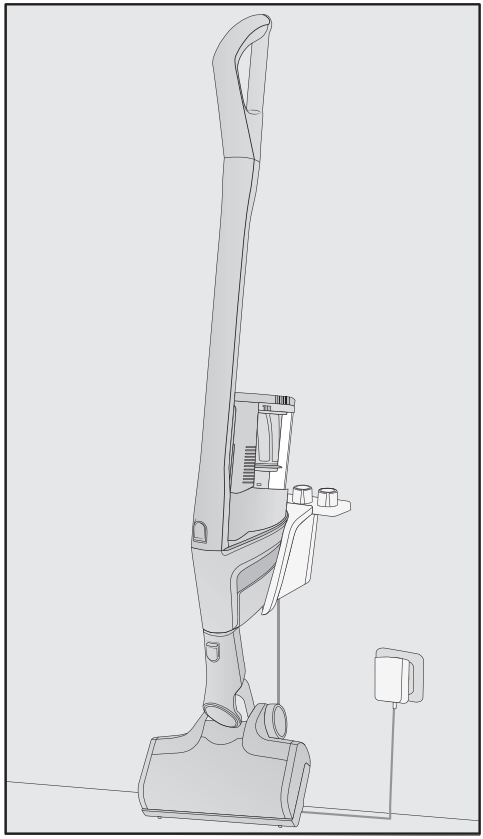

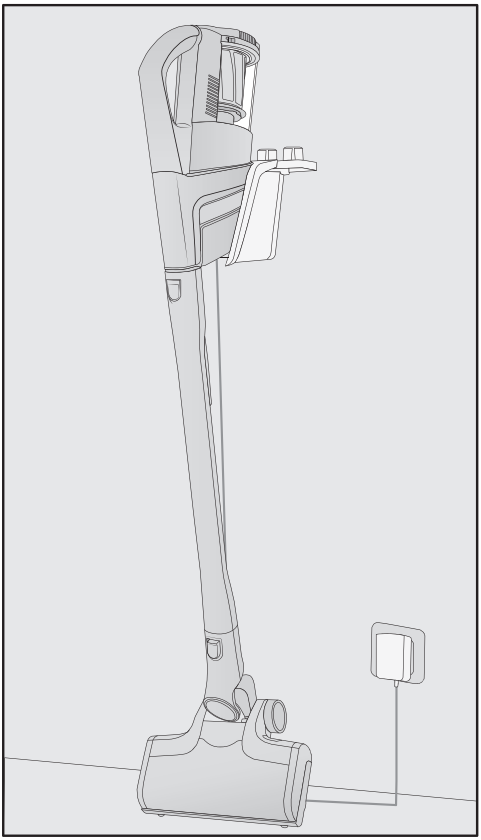

Wall mounting

The supplied wall bracket has a mounting plate with a bag of screws attached to the back.
Attach the mounting plate to the point on the wall where you want the wall mounting to be.

- Remove the bag of screws.

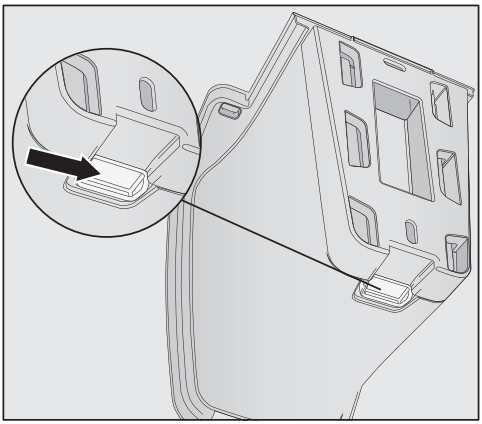

- Press the release catch at the bottom of the wall bracket.

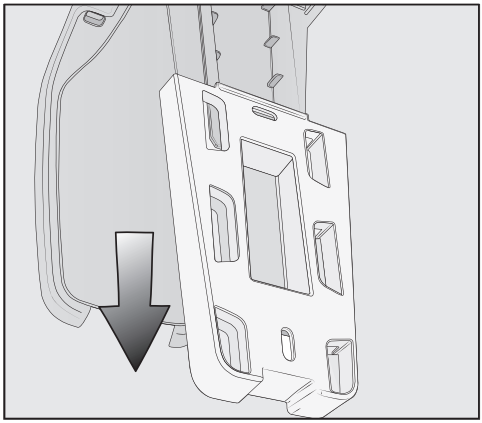

- Remove the mounting plate from the wall bracket by sliding it downwards.

Attaching the mounting plate

2 plugs and 2 T20 TORX screws are supplied for attaching the mounting plate to the wall.
You will also need a battery-operated screwdriver or a drill (with a drilling diameter of 6 mm).

Depending on how your vacuum cleaner is configured, select a distance of 45 cm or 98 cm between the bottom edge of the mounting plate and the floor.

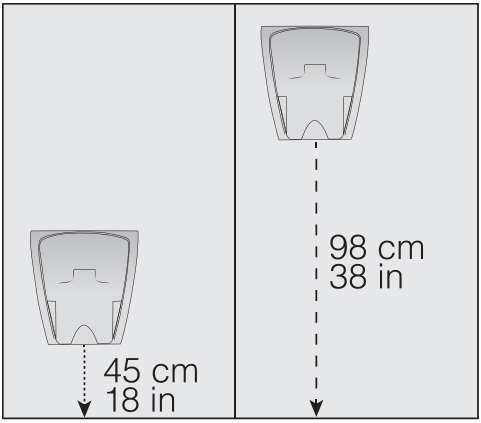

Be careful not to damage any cables laid in the wall.

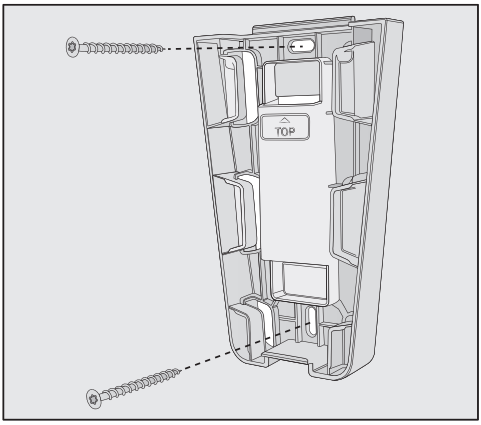

■ Attach the mounting plate to the wall.

Connecting the accessories holder (if required)

An accessories holder is supplied for storing the three-piece accessory set (see “Using the accessories supplied”).

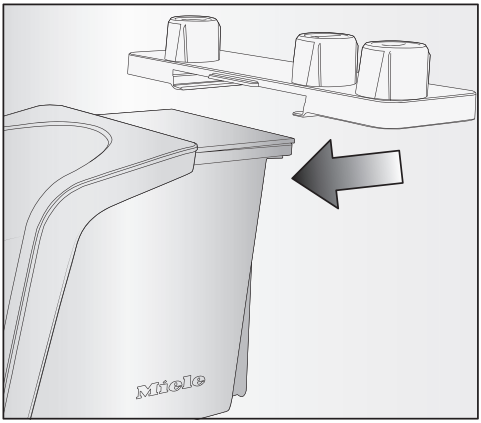

■ Push the accessories holder on to the wall bracket as far as it will go.

Connecting the wall bracket

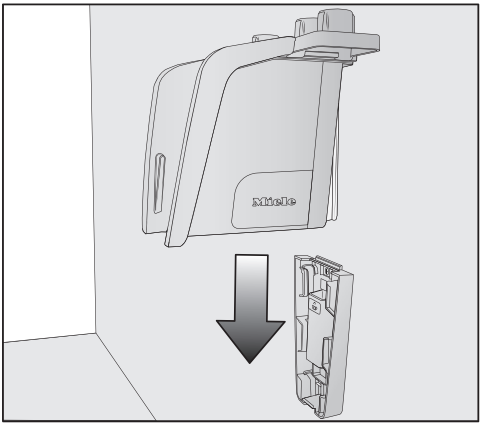

- Slide the wall bracket down into the mounting plate from above until it audibly clicks into place.

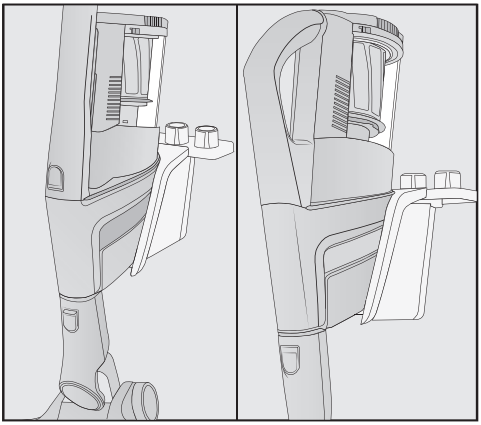

- Slide the PowerUnit of the fully assembled vacuum cleaner, with the battery inserted, down into the wall bracket from above.
- Plug the supplied charging cable into the charging socket on the bottom of the battery.
- Plug the charger into the power socket.

The charging process will start.

Battery charging state indicator (while charging)

The battery charging state is displayed on the PowerUnit.

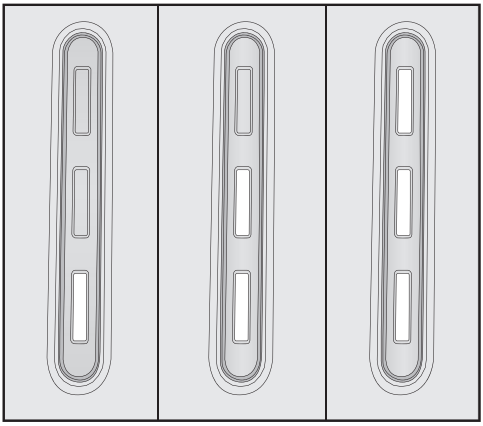

Charging capacity	Display
Approx. 0–34 %	Bottom light flashes slowly
Approx. 35–69 %	Bottom light is lit up; middle light flashes slowly
Approx. 70–90 %	Bottom and middle lights are lit up; top light flashes slowly
Approx. 91–100 %	Bottom, middle and top lights are lit up

Once the battery is fully charged, the battery charging state indicator switches off after 10 minutes to conserve energy.

You can display the charging state for 4 seconds at any time by pressing the On/Off switch on the Comfort handle.

If the battery has not been used for a long time and has run down, it will go into a safe mode. As a result, the battery charging state indicator will only respond after approximately 30–60 minutes when charging in the PowerUnit.

Battery charging state indicator (while in use)

The battery charging state is displayed on the PowerUnit.

Charging capacity	Display
Approx. 100–70 %	Top, middle and bottom lights are lit up
Approx. 69–35 %	Middle and bottom lights are lit up
Approx. 34–11 %	Bottom light is lit up
Approx. 10–0 %	Bottom light flashes slowly

Using the accessories supplied

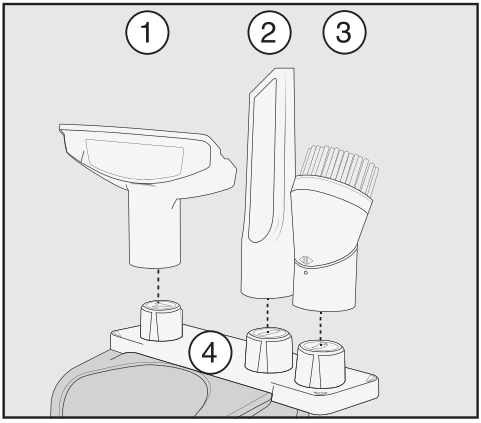

① **Upholstery nozzle**
Accessory for cleaning upholstery, mattresses and cushions.

② **Crevice nozzle**
Accessory for cleaning in folds, crevices or corners.

③ **Dusting brush**
Accessory for vacuuming skirting boards, carved furniture or ornaments.
The head can be swivelled to adjust the angle.

④ **Accessories holder**
For storing the three-piece accessory set.

Symbols on the holder show where to attach the different accessories.
You can fit the accessories holder to the wall bracket (see “Installation and connection” – “Connecting the accessories holder”).

Electrobrush Multi Floor XXL (SEB 430 or SEB 435)

Follow the flooring manufacturer's cleaning and care instructions.

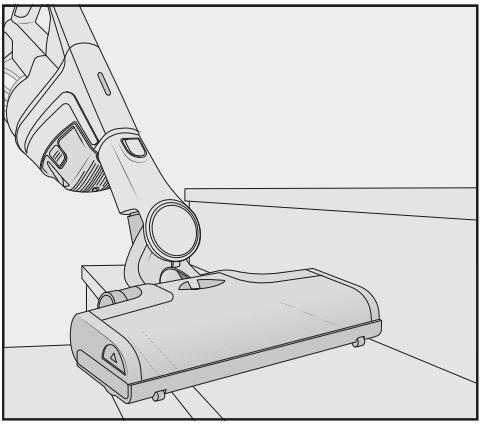

The Electrobrush can be used for all normal cleaning of carpets, rugs and hard flooring which is not susceptible to scratching.

Tip: The suction tube is not a convenient option for cleaning carpeted stairs.

Miele offers a range of suitable accessories for many special applications (see "Optional accessories").

Electro Compact handheld brush (SEB 23)

(depending on model)

Follow the flooring manufacturer's cleaning and care instructions.

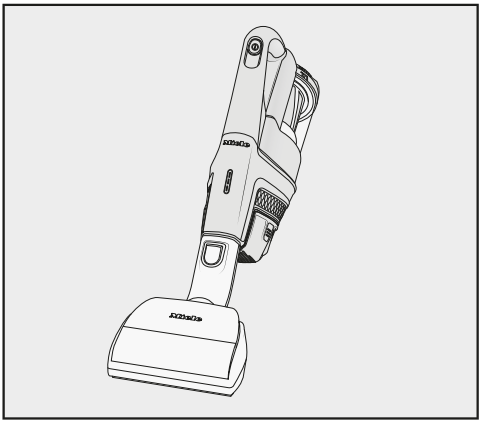

The handheld brush is particularly suitable for intensive cleaning of upholstery and car seats.

Tip: The suction tube is not a convenient option for cleaning upholstery or car seats.

Additional AP01 battery and LS03 charger cradle

(depending on model)

Using the additional battery doubles the amount of time the vacuum cleaner can be used for.

Before charging for the first time, please note the information in "Installation and connection" – "General battery information".

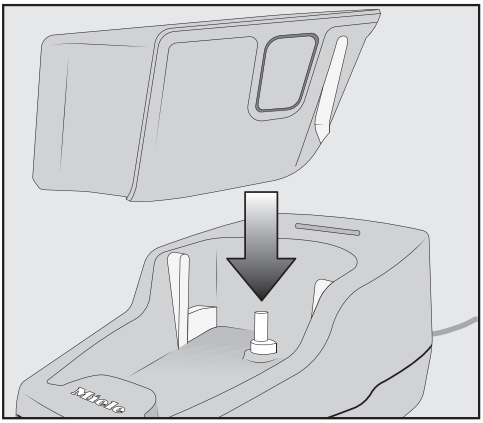

- After the battery has been fully charged once in the PowerUnit, the charger cradle can be used to charge it. Push the battery into the charger cradle until it audibly clicks into place.
- Insert the plug into a power socket.

The charging process will start. The battery charging state indicator flashes on the left.
You can find out more about the battery charging state indicator in “Installation and connection” – “Battery charging state indicator”.

If you place the run-down battery in the charger cradle straight after use, it will only start charging once the battery has cooled down.
The cooling process can take up to 60 minutes. The battery charging state indicator on the charger cradle will not respond during this time.

Use

Switching on and off

- Pull the plug out of the charging socket on the battery.
- If you have put the vacuum cleaner away in the the wall bracket for storage, take it out.

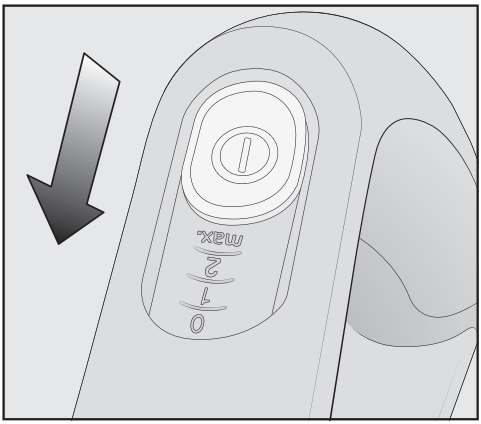

- Press the On/Off switch on the Comfort handle ⓘ.

Regulating the suction power

The suction power can be regulated to suit the type of flooring being cleaned. Reducing the suction power reduces the amount of effort required to manoeuvre the Electrobrush.

There are 3 power levels to choose from on the Comfort handle:

1	Lowest power level for light soiling
2	Medium power level for normal soiling
Max.	Highest power level for heavy soiling

The floor covering detection function is activated in the medium and highest power levels.
The Electrobrush power output is automatically set to the optimum level based on the type of flooring – this can lead to a change in the operating noise.

Illuminating the work area

(depending on model)

The Electrobrush on your vacuum cleaner is equipped with BrilliantLight to illuminate the work area.

Self-standing function for short pauses in vacuuming

(For safety reasons, this function can only be used when the PowerUnit is fitted at the bottom of the vacuum cleaner)

If you are vacuuming with the PowerUnit fitted at the bottom of the vacuum cleaner, you can easily interrupt operation while the appliance is switched on.

- Swing the vacuum cleaner forwards until the Electrobrush connector audibly clicks into place.

The vacuum cleaner stays securely upright, the Electrobrush switches itself off and the battery is conserved.
If you then unlock the connector on the Electrobrush, the Electrobrush will switch on again.

Maintenance

⚠ Risk of injury caused by rotating roller brush.

You can injure yourself on the rotating roller brush.

Switch the vacuum cleaner off before doing any maintenance work. Use the On/Off switch on the Comfort handle to do this.

Replacement parts are available from your Miele dealer or from the Miele Spare Parts Dept.

Emptying the dust container

Empty the dust container before the dust has reached the **max** marking on the dust container.

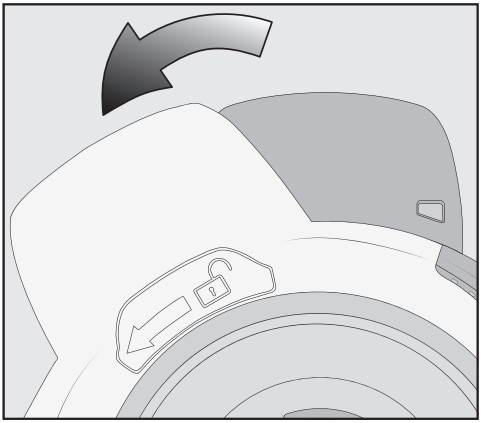

- Turn the lid of the dust container in the direction of the arrow as far as the first stop.

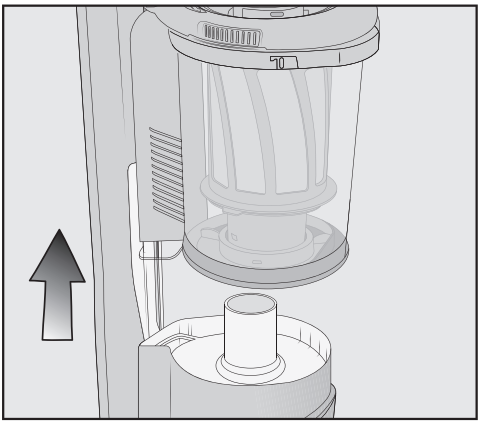

■ Lift the dust container upwards to remove it.

The contents of the container can be disposed of with normal domestic waste, providing they consist of general household dust only.

■ Hold the dust container close to the bin to prevent dust from billowing out.

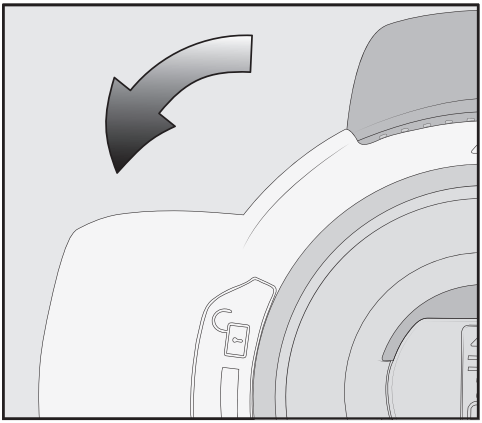

■ Turn the lid of the dust container in the direction of the arrow as far as the next stop.

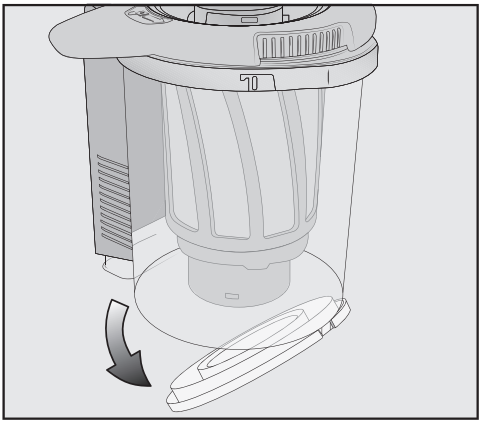

The cover at the bottom of the dust container will open and the dust will fall out.

■ Turn the lid of the dust container back to its original position.

■ Close the cover making sure it clicks into place.

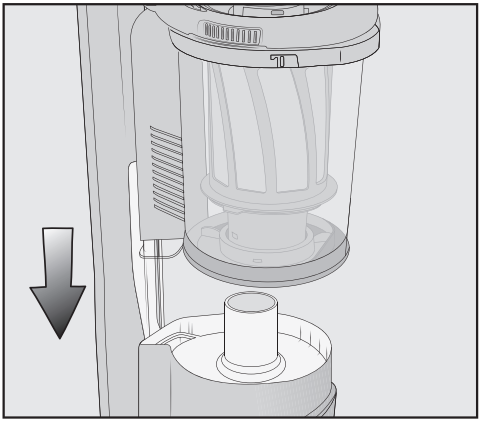

■ Slide the dust container handle along the guide line and down on to the PowerUnit connector from above until it audibly clicks into place.

Cleaning the fine dust filter

The fine dust filter is located in the dust container.
Clean the fine dust filter at least once a month.

- Remove the dust container.

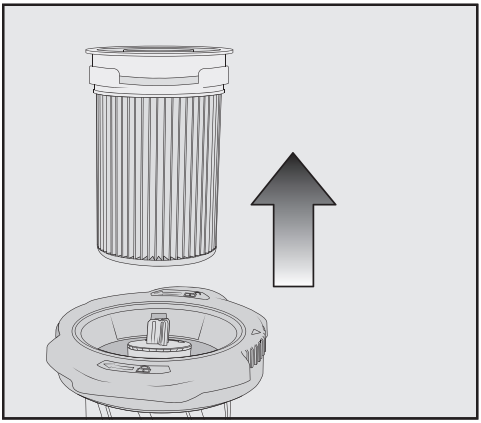

- Lift the fine dust filter upwards to remove it.

⚠ Risk of damage caused by incorrect cleaning.
The fine dust filter can become damaged and be less effective as a result.
Do not clean the inside of the fine dust filter. Do not use pointed or sharp-edged objects to clean the filter. Do not brush the fine dust filter.

- Hold the fine dust filter over a bin.
- Carefully knock the fine dust filter with the rubberised lower edge.
- Turn the fine dust filter slightly while you do this to free the dirt from all of the crevices.
- Once it is clean, replace the fine dust filter in its position in the dust container.
- Replace the dust container on the PowerUnit connector.

Cleaning the pre-filter

The pre-filter is located in the dust container.
Clean the pre-filter when required.

- Remove the dust container.
- Remove the fine dust filter.

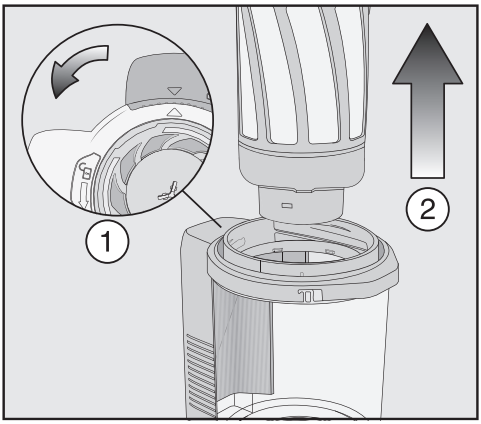

- Empty the dust container over a bin and lift the pre-filter upwards to remove it.

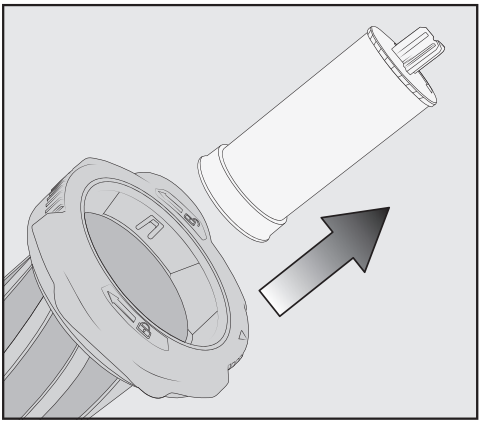

- Unlock the motor protection filter by turning it anti-clockwise and lift it upwards to remove it.

> ⚠ Risk of damage caused by incorrect cleaning.
> The pre-filter can become damaged and be less effective as a result.
> Do not use pointed or sharp-edged objects to clean the filter.

- Carefully knock the dust out of the pre-filter over a bin.

Tip: Use a tool like a fine cleaning brush to clean the inside of the pre-filter thoroughly.
You do not need to clean the motor protection filter. It can be removed so that the inside of the pre-filter is easier to reach.

- After cleaning the pre-filter, place the motor protection filter back into the pre-filter securely, making sure it is properly positioned.
- Lock the motor protection filter by turning it clockwise as far as it will go.

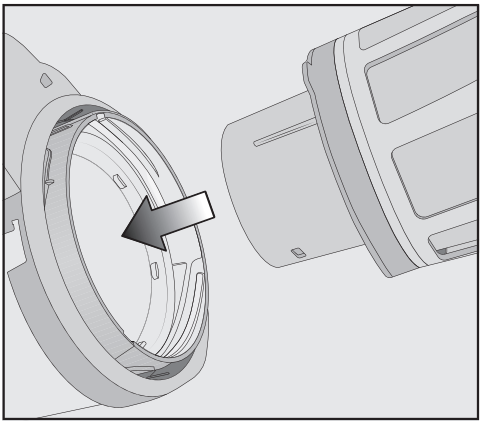

- Replace the pre-filter in the dust container.

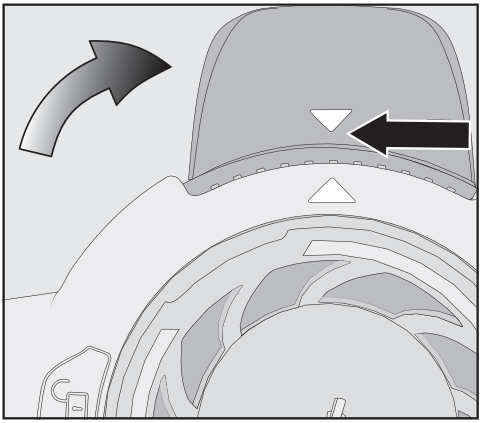

- To do this, line up the guide lines on the two sections and turn the dust container lid back to its original position.
- Close the cover at the bottom of the dust container, making sure it clicks into place.
- Replace the fine dust filter.
- Replace the dust container on the PowerUnit connector.

Cleaning the dust container

Clean the dust container as required.

- Remove the dust container.
- Empty the dust container over a bin and lift the pre-filter upwards to remove it.
- Clean the dust container using water and mild washing-up liquid.
- Dry the dust container thoroughly.
- Replace the pre-filter in the dust container.
- Replace the dust container on the PowerUnit connector.

Cleaning the Electrobrush/handheld brush

(The availability of the handheld brush depends on the model)

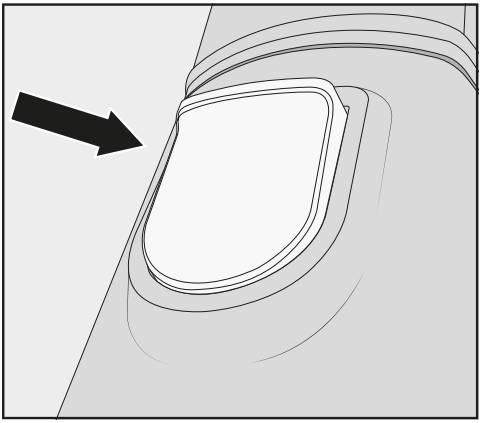

- Separate the Electrobrush/handheld brush from the vacuum cleaner connector.

Removing threads and hairs

- Place the Electrobrush/handheld brush upside down on a level, clean surface.

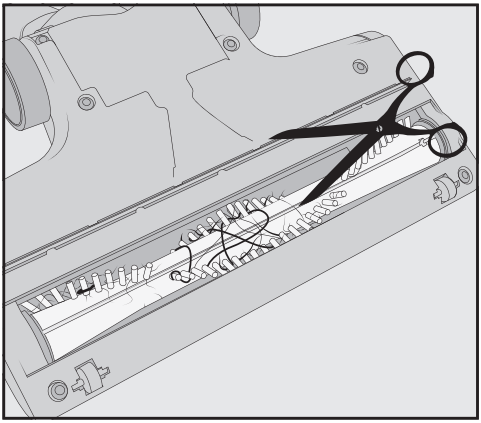

- Cut any threads or hairs that have wound themselves around the roller brush with a pair of scissors. To guide the scissors, move along the guide track on the roller brush.

Then run the vacuum cleaner to vacuum up the cut threads and hairs.

Removing the roller brush

(Not possible with the handheld brush)

You can take the roller brush out of the Electrobrush in order to remove stubborn soiling and clean the inside of the Electrobrush.

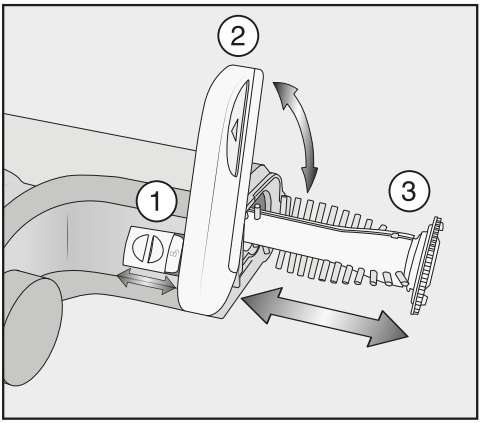

- Unlock the cover on the side of the Electrobrush so that the 🔓 symbol becomes visible.
- Lift the cover up as far as it will go.
- Remove the roller brush.
- Clean the roller brush and remove any stubborn dirt inside the Electrobrush.
- Reassemble the Electrobrush in reverse order.

Replacing the rechargeable battery

An original Miele AP01 lithium-ion rechargeable battery (HX LA) is required.

Follow the instructions regarding the handling and disposal of rechargeable batteries found in the following sections: “Warning and safety”, “Caring for the environment” and “Installation and connection” (“General battery information”).

Problem solving guide

Many malfunctions and faults that can occur in daily operation can be easily remedied. Time and money will be saved because a service call will not be needed.

The following guide may help you to find the reason for a malfunction or a fault, and to correct it.

⚠ Risk of injury caused by rotating roller brush.
You can injure yourself on the rotating roller brush.
Switch the vacuum cleaner off before dealing with any problems. Use the On/Off switch on the Comfort handle to do this.

Problem	Cause and remedy
The cleaning performance is poor.	The dust container is full. ■ Empty and clean the dust container.
	The Electrobrush is dirty/blocked. ■ Clean the roller brush and the inside of the Electrobrush (see “Maintenance” – “Cleaning the Electrobrush”).
Cleaning performance is reduced.	The fine dust filter is dirty. ■ Clean the fine dust filter (see “Maintenance” – “Cleaning the fine dust filter”).
	The pre-filter is dirty. ■ Clean the pre-filter (see “Maintenance” – “Cleaning the pre-filter”).
The Electrobrush switches itself off.	The Electrobrush is overloaded – this can happen on surfaces like deep-pile carpet. ■ Switch the vacuum cleaner off and switch it on again at a reduced suction power level. Use the On/Off switch on the Comfort handle to do this.
The operating noise is changing during vacuuming.	The floor covering detection function is activated in the medium and highest power levels. The Electrobrush power output is automatically set to the optimum level based on the type of flooring. ■ The noise is not unusual – the vacuum cleaner is functioning normally.

Problem	Cause and remedy
The vacuum cleaner does not start when it is switched on.	There is no battery inserted or the battery is inserted incorrectly. ■ Insert the battery or check how the battery is positioned (see “Installation and connection” – “Inserting the battery”).
	The rechargeable battery is not sufficiently charged. ■ Charge the battery exactly as described in these operating instructions (see “Installation and connection” – “Charging the battery”).
	An original Miele battery has not been inserted. ■ Insert an original Miele AP01 lithium-ion rechargeable battery (HX LA).
	The charger is still plugged in. ■ Pull the plug out of the charging socket on the battery.

Error messages

⚠ Risk of injury caused by rotating roller brush.
You can injure yourself on the rotating roller brush.
Switch the vacuum cleaner off before dealing with any problems. Use the On/Off switch on the Comfort handle to do this.

Error messages are displayed with a quick flashing light on the battery charging state indicator on the PowerUnit.

Problem	Cause and remedy
Bottom light flashes quickly	Internal system error ■ Remove the battery, wait for 10 seconds, reinsert it and charge it.
Bottom and middle lights flash quickly	“Battery overheating” error ■ Wait for approximately 30 minutes before switching the vacuum cleaner back on again.
Middle and top lights flash quickly	“Battery not recognised” error ■ Insert an original Miele AP01 lithium-ion rechargeable battery (HX LA).
Top light flashes quickly	“Comfort handle not recognised” error ■ Remove the Comfort handle and reconnect it (see “Installation and connection” – “Connecting the Comfort handle”). ■ Remove the battery, wait for 10 seconds and reinsert it.

Cleaning and care

⚠ Risk of injury caused by rotating roller brush.

You can injure yourself on the rotating roller brush.

Switch the vacuum cleaner off before cleaning it. Use the On/Off switch on the Comfort handle to do this.

Vacuum cleaner and accessories

⚠ Risk of electric shock from mains voltage.

If moisture gets into the charger, there is a risk of electric shock.

Do not let the charger get wet.

Follow the special cleaning instructions for the dust container in the “Maintenance” section.

The vacuum cleaner and all plastic accessories can be cleaned with a proprietary cleaner suitable for plastic.

⚠ Damage due to unsuitable cleaning agents.

All surfaces are susceptible to scratching. Contact with unsuitable cleaning agents can alter or discolour the external surfaces.

Do not use abrasive cleaning agents, glass cleaning agents, all-purpose cleaners or oil-based conditioning agents.

Service

Contact in case of malfunction

In the event of any faults which you cannot remedy yourself, please contact your Miele Dealer or Miele Service.

Contact information for Miele Service can be found at the end of this document.

Please note that telephone calls may be monitored and recorded for training purposes and that a call-out charge will be applied to service visits where the problem could have been resolved as described in this booklet.

Warranty

For information on the appliance warranty specific to your country, please contact Miele. See back cover for address.

In the UK, your appliance warranty is valid for 2 years from the date of purchase. However, you must activate your cover by calling 0330 160 6640 or registering online at www.miele.co.uk.

Warranty in the UAE

The appliance warranty is valid for 2 years from date of purchase.
For more information on country specific warranty terms and conditions, please contact Miele Customer Service. See end of this booklet for contact details.

Optional accessories

Follow the flooring manufacturer's cleaning and care instructions.

We recommend using only genuine Miele accessories bearing the "ORIGINAL Miele" logo on the packaging. Only these will guarantee the optimum performance of your vacuum cleaner and the best possible cleaning results.

Please note that faults and damage caused by use of accessories which do not bear the "ORIGINAL Miele" logo on the packaging are not covered by the vacuum cleaner warranty.

Purchasing accessories

Original Miele accessories are available from the Miele webshop, the Miele Customer Service Department and from your Miele dealer.

Original Miele accessories are identified by the "ORIGINAL Miele" logo on the packaging.

Certain models are supplied as standard with one or more of the following accessories.

SEB 23 Electro Compact handheld brush (HX SEB)

For intensive cleaning of upholstery and car seats.

Dusting brush with natural bristles (SSP 10)

(only available in selected countries)

For dusting particularly delicate items.

Radiator brush (SHB 30)

For dusting radiators, narrow shelves and crevices.

Mattress nozzle (SMD 10)

For vacuuming upholstery, mattresses, cushions, curtains, covers etc.

Crevice nozzle, 300 mm (SFD 10)

Extra long crevice nozzle for cleaning in folds, crevices and corners.

Crevice nozzle, 560 mm (SFD 20)

Flexible crevice nozzle for vacuuming hard to reach places.

Upholstery nozzle, 190 mm (SPD 10)

Extra wide upholstery nozzle for cleaning upholstered furniture, mattresses and pillows.

Additional AP01 battery (HX LA)

For doubling the amount of time the vacuum cleaner can be used for.

LS03 charger cradle (HX LS)

For charging the additional battery independently of the appliance, i.e. while the appliance is in use.

Electrical connection for the UK

All electrical work should be carried out by a suitably qualified and competent person in strict accordance with current national and local safety regulations (BS 7671 in the UK). The voltage and frequency are given on the data plate located underneath the vacuum cleaner. Please ensure that these match the household mains supply. The fuse rating is quoted on the plug. The appliance is supplied with a cable and moulded plug ready for connection to a 230-240 V/50 Hz a.c. single phase supply.

Miele

United Kingdom
Miele Co. Ltd., Fairacres, Marcham Road, Abingdon, Oxon, OX14 1TW
Tel: 0330 160 6600, Internet: www.miele.co.uk/service, E-mail: info@miele.co.uk

Australia
Miele Australia Pty. Ltd.
ACN 005 635 398
ABN 96 005 635 398
1 Gilbert Park Drive
Knoxfield, VIC 3180
Tel: 1300 464 353
Internet: www.miele.com.au

China Mainland
Miele Electrical Appliances Co., Ltd.
1-3 Floor, No. 82 Shi Men Yi Road
Jing' an District
200040 Shanghai, PRC
Tel: +86 21 6157 3500
Fax: +86 21 6157 3511
E-mail: info@miele.cn,
Internet: www.miele.cn

Hong Kong, China
Miele (Hong Kong) Ltd.
41/F - 4101, Manhattan Place
23 Wang Tai Road
Kowloon Bay, Hong Kong
Tel: (852) 2610 1025
Fax: (852) 3579 1404
Email:
customerservices@miele.com.hk
Website: www.miele.hk

India
Miele India Pvt. Ltd.
Ground Floor, Copia Corporate Suites
Plot No. 9, Jasola
New Delhi - 110025
Tel: 011-46 900 000
Fax: 011-46 900 001
E-mail: customercare@miele.in
Internet: www.miele.in

Ireland
Miele Ireland Ltd.
2024 Bianconi Avenue
Citywest Business Campus
Dublin 24
Tel: (01) 461 07 10
Fax: (01) 461 07 97
E-Mail: info@miele.ie
Internet: www.miele.ie

Malaysia
Miele Sdn Bhd
Suite 12-2, Level 12
Menara Sapura Kencana
Petroleum
Solaris Dutamas No. 1
Jalan Dutamas 1
50480 Kuala Lumpur, Malaysia
Phone: +603-6209-0288
Fax: +603-6205-3768

New Zealand
Miele New Zealand Limited
IRD 98 463 631
8 College Hill
Freemans Bay, Auckland 1011
New Zealand
Tel: 0800 464 353
Internet: www.miele.co.nz

Singapore
Miele Pte. Ltd.
29 Media Circle
#11-04 ALICE@Mediapolis
Singapore 138565
sTel: +65 6735 1191
Fax: +65 6735 1161
E-Mail: info@miele.com.sg
Internet: www.miele.sg

South Africa
Miele (Pty) Ltd.
63 Peter Place
Bryanston 2194
P.O. Box 69434
Bryanston 2021
Tel: (011) 875 9000
Fax: (011) 875 9035
E-mail: info@miele.co.za
Internet: www.miele.co.za

Thailand
Miele Appliances Ltd.
BHIRAJ TOWER at EmQuartier
43rd Floor Unit 4301-4303
689 Sukhumvit Road
North Klongton Sub-District
Vadhana District
Bangkok 10110, Thailand

United Arab Emirates
Miele Appliances Ltd.
Showroom 1
Eiffel 1 Building
Sheikh Zayed Road, Umm Al Sheif
P.O. Box 114782 - Dubai
Tel. +971 4 3044 999
Fax. +971 4 3418 852
800-MIELE (64353)
E-Mail: info@miele.ae
Website: www.miele.ae

Manufacturer: Miele & Cie. KG, Carl-Miele-Straße 29, 33332 Gütersloh, Germany

SMxxx - 3620

M.-Nr. 11 419 150 / 01