Installation Guide

Quality, Design and Innovation

home.liebherr.com/fridge-manuals

LIEBHERR

Contents

1 General safety instructions 2

2 Installation conditions 2
2.1 Location 2
2.2 Installing multiple appliances 2
2.3 Mains connection 3

3 Appliance dimensions 3

4 Recess dimensions 4
4.1 Internal dimensions 4

5 Ventilation requirements 4

6 Transporting the appliance 5

7 Unpacking the appliance 5

8 Setting up the appliance 5
8.1 After installation 5

9 Disposing of packaging 5

10 What the symbols mean 5

11 Reversing the door 6

12 Water connection* 8

13 Connecting the water supply 9

14 Installing the appliance in the recess 9

15 Cabinet fronts 16
15.1 Dimensions 16
15.2 Mounting the cabinet front(s) 17
15.3 Setting the clearance to avoid collision 17

16 Connecting the appliance 18

The manufacturer works constantly on the further development of all the types and models. Therefore please understand that we have to reserve the right to make design, equipment and technical modifications.

To get to know all the benefits of your new appliance, please read the information contained in these instructions carefully.

The instructions apply to several models. Differences may occur. Text relating only to specific appliances is marked with an asterisk (*).

Instructions for action are marked with a ▶, the results of action are marked with a ▷.

1 General safety instructions

- Only install, connect and dispose of the appliance according to the instructions.
- The socket must be easily accessible so that the appliance can be quickly disconnected from the supply in an emergency. It must be outside the area of the rear of the appliance.

⚠	DANGER	identifies a situation involving direct danger which, if not obviated, may result in death or severe bodily injury.
⚠	WARNING	identifies a dangerous situation which, if not obviated, may result in death or severe bodily injury.
⚠	CAUTION	identifies a dangerous situation which, if not obviated, may result in minor or medium bodily injury.
	NOTICE	identifies a dangerous situation which, if not obviated, may result in damage to property.

	Note	identifies useful information and tips.

2 Installation conditions

⚠ **WARNING**
Fire hazard due to dampness!
If live parts or the mains lead become damp this may cause short circuits.
▶ The appliance is designed for use in enclosed areas. Do not operate the appliance outdoors or in areas where it is exposed to splash water or damp conditions.

Intended use
- Install and use the appliance in indoor spaces only.
- Use the appliance only once installed.

2.1 Location

⚠ **WARNING**
Fire hazard due to refrigerant!
The coolant used is eco-friendly but also flammable. Any leaking coolant may ignite.
▶ Do not damage the piping of the refrigeration circuit.

- If the appliance is installed in a very humid environment, condensation can build up on the outside of the unit.
  Always make sure the installation location is well ventilated .
- The more coolant there is in the appliance, the larger the room in which the appliance is installed must be. If the room is too small, any leak may create a flammable mixture of gas and air. For each 8 g of coolant the installation space must be at least 1 m^3. Information on the coolant is on the model plate inside the appliance.

2.1.1 Supporting floor

- The floor of the installation site must be horizontal and even.
- If the floor is not entirely even, the kitchen cabinet housing the appliance must be levelled with support blocks.

2.1.2 Positioning

- Do not install the appliance in direct sunlight, next to an oven, radiator or similar.
- Only fit the appliance into solid kitchen units.

2.2 Installing multiple appliances

NOTICE
Risk of damage due to condensate!
▶ Do not install the appliance directly alongside a further refrigerator/freezer.

NOTICE
Risk of damage due to condensation!
▶ Do not install the appliance directly above another refrigerator or freezer.

These appliances are designed for a variety of installation options. Combine appliances only if the appliance is suitable. The following table shows the installation options by model:

*** Depending on model and options**

Installation option	Model
Single	All models
Side-by-side (SBS)	Model names starting with **S...**. See the supplied SBS installation guide for the correct positioning.
Stacked	Models with a maximum recess height of 880 mm and with a heated cover can be “stacked”. Top appliance: up to a maximum recess height of 140 mm

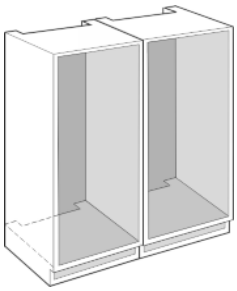

Build each appliance into a separate recess.

2.3 Mains connection

WARNING

Risk of fire due to short circuit!

If the mains cable/connector of the appliance or of another appliance touch the rear of the appliance, the mains cable/connector may be damaged by the appliance vibrations, leading to a short circuit.

- ▶ Stand the appliance so that it is not touched by connectors or main cables.
- ▶ Do not plug the appliance or any others into sockets located near the rear of the appliance.

3 Appliance dimensions

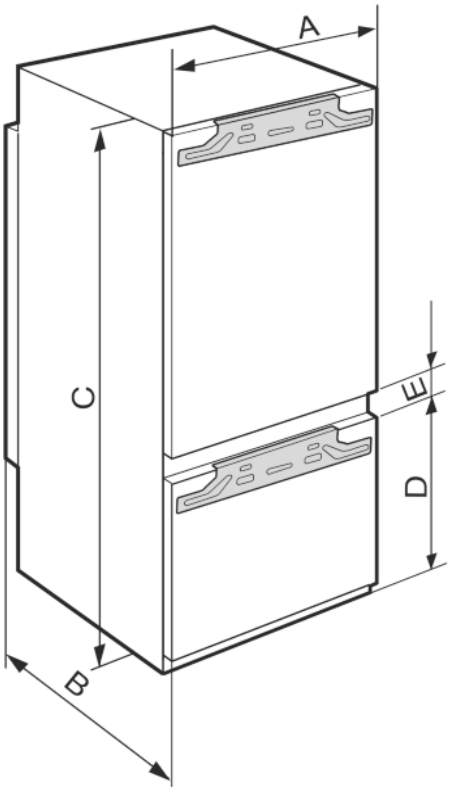

Fig. 1

	A (mm)	B (mm)	C (mm)	D (mm)	E (mm)
ICB/b/c/i/d/ 51..	559	546	1770	549	15
IC/e/d51.. / S/ICN/f/d/e/i51.. / ICBN/c/e/l/d/51.. /IKG 5Z1ea3/IKGN 5Z1fa3				695	

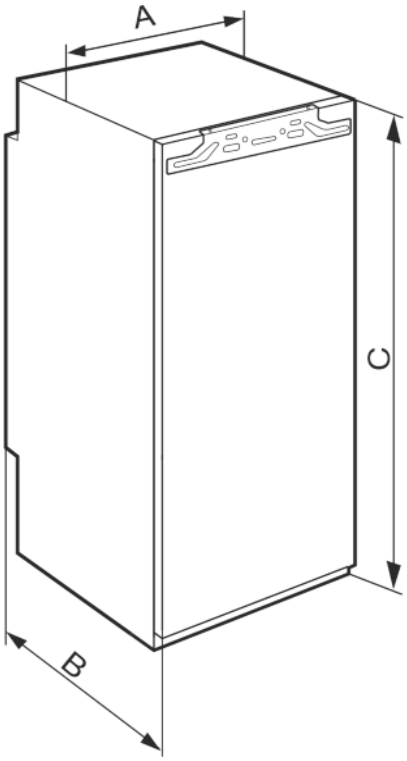

Fig. 2

	A (mm)	B (mm)	C (mm)
IR/f/e/d/c39.. SIBc39..	559	546	872
IRe40../ IRBd40..			1022
IR/e/ d41../IRB/b/d/ i41..			1218
IRe45../ IRBd45..			1395
IRBe48..			1572
IR/f/e51../ IRD/c/e/d/i/51.. / IRBPdi51../ IK 5Z1/fa1/ea0			1770

4 Recess dimensions

4.1 Internal dimensions

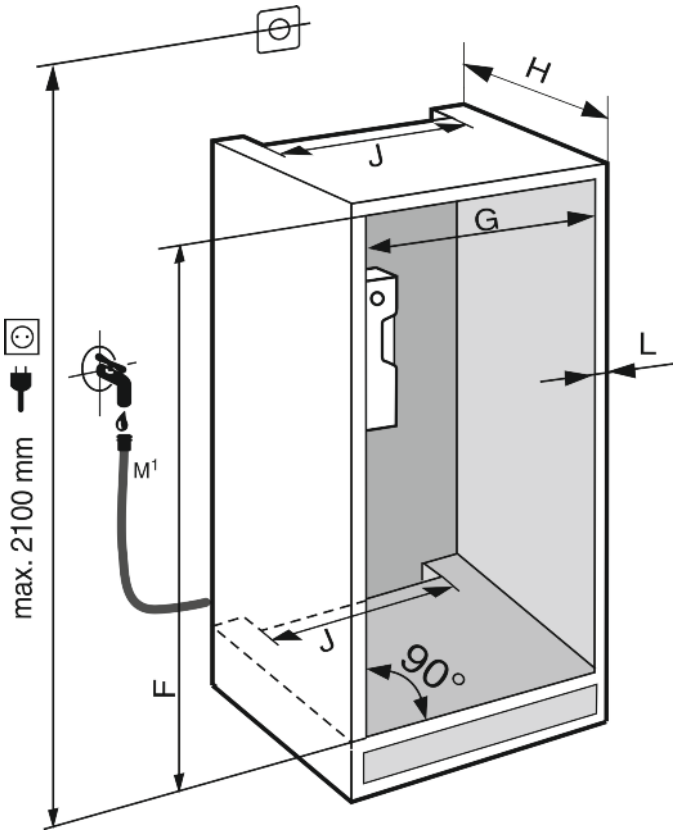

*Fig. 3**

M[1]): Only for IRBdi 5180/5190, ICNdi 5173, ICBNd/i 5163/73/83, ICBdi 5182*

	F (mm)*	G (mm)*	H (mm)*	J (mm)*	L (mm)*
IR/f/e/d/ c39.. SIBc39../ IK 3Z9/fa0/fa 1	874 — 890	560 — 570	min. 550, recom-mended: 560	min. 500	max. 19
IRe 40../ IRBd 40..	1024 — 1040				
IR/e/d 41../IRB/b/ d/i 41..	1220 — 1236				
IRe 45../ IRBd 45..	1397 — 1413				
IRBe 48..	1574 — 1590				
IR/f/e 51../ IRD/c/e/d/i/ 51.. / IC/e/d 51.. / S/ICN/f/d/e /i 51.. / ICB/N/c/e/I /d/ 51.. / IRBPdi 51../IK 5Z1/fa1/ea 0/ IKG 5Z1ea3/ IKGN 5Z1fa3/ ISKGN 5Z1fa3	1772 — 1788				

The specified energy consumption applies to a unit depth of 560 mm. The appliance will work properly at a unit depth of 550 mm, but at a slightly higher energy consumption.

- ▶ Check the wall thickness of adjacent cabinets: It must be min. 16 mm.
- ▶ Only fit the appliance into stable, solid kitchen units. Secure the unit against tipping.
- ▶ Align the cabinets with a spirit level and a try square. If necessary level them by putting something underneath them.
- ▶ Ensure that the floor and the side panels of the cabinet are at right angles to each other.

5 Ventilation requirements

WARNING

Blocked ventilation openings pose a risk of fire and damage!

- ▶ Always keep the ventilation openings clear. Always ensure that the appliance is properly ventilated!

Always follow the required ventilation gaps:

- The depth of the ventilation shaft at the back of the cabinet must be at least 38 mm.
- At least 200 cm^2 is required for the ventilation gap cross sections in the plinth and the housing cabinet.
- As a rule, the bigger the ventilation space the more efficiently the appliance can run.

Sufficient ventilation is required for the operation of the appliance. The provided ventilation grids ensure an effective ventilation gap on the appliance of 200 cm^2. If you replace the ventila-

* Depending on model and options

tion grids with a panel this must have the same size or larger ventilation gap than the grid provided by the manufacturer.

6 Transporting the appliance

▶ Transport the appliance only in suitable packaging.
▶ Transport the appliance upright.
▶ Do not transport the appliance on your own.

7 Unpacking the appliance

Before you connect the appliance, report any damage immediately to the delivery company.

▶ Check the appliance and the packaging for damage during transport. Contact the supplier immediately if you suspect any level of damage.
▶ Remove all materials from the back or the side walls of the appliance that may prevent proper installation or ventilation.
▶ Take the power cable from the rear of the appliance. Remove the cable brackets when you do this, otherwise there will be noise caused by vibrations!

8 Setting up the appliance

CAUTION
Risk of injury!
▶ The appliance must be transported to its place of installation by two people.

WARNING
Risk of tipping
▶ The appliance must be fixed in accordance with the instructions in order to prevent a hazard caused by the instability of the appliance.

WARNING
Fire hazard and danger of damage!
▶ Do not place appliances emitting heat e.g. microwaves, toasters etc. on the appliance!

If possible, have the appliance installed in the kitchen unit by a professional.

Do not install the appliance on your own.

8.1 After installation

▶ Remove all transport safety components.

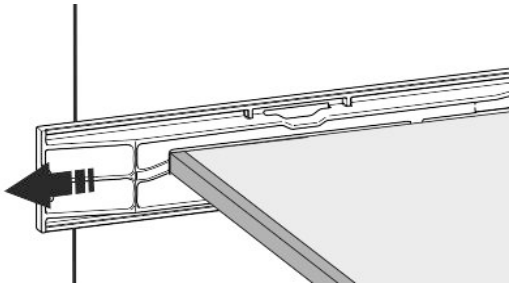

Fig. 4

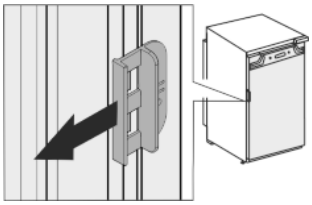

▶ Remove the red transport safety device.

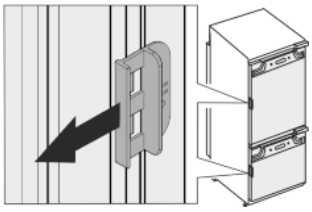

▶ Clean the appliance (see User Guide, Cleaning the appliance).

9 Disposing of packaging

WARNING
Danger of suffocation due to packing material and plastic film!
▶ Do not allow children to play with packing material.

The packaging is made of recyclable materials:

- corrugated board/cardboard
- expanded polystyrene parts
- polythene bags and sheets
- polypropylene straps
- nailed wooden frame with polyethylene panel*

▶ Take the packaging material to an official collecting point.

10 What the symbols mean

	Risk of injury here! Follow the safety notes!
	These instructions apply to a range of models. Follow this step only if it applies to your appliance.
	To install, please follow the detailed description in the Guide.
	This section applies either to a single-door appliance or a double-door appliance.
	Choose either an appliance with the door opening to the right or an appliance with the door opening to the left.
	Installation step required if your model has IceMaker and/or InfinitySpring.

	Just loosen the screws or tighten them slightly.
	Tighten the screws.
	Check whether the following step is necessary for your model.
	Check the correct assembly/seat of the components used.
	Measure the given dimensions and correct if necessary.
	Tool for assembly: Metre rule
TORX® 20	Tool for assembly: Cordless screw-driver and attachments.
	Tool for assembly: Spirit level.
SW7 SW10	Tool for assembly: SW 7 and SW 10 spanners.
	Two people are required for this step.
	Carry out this step at the marked place on the appliance.
	Tools for assembly: String.
	Tools for assembly: Square.
	Tools for assembly: Screwdriver.
	Tools for assembly: Scissors.
	Tools for assembly: Marker pen, removable.
	Accessories: Remove components.
	Dispose of components that are no longer needed.

11 Reversing the door

Tool

Fig. 5

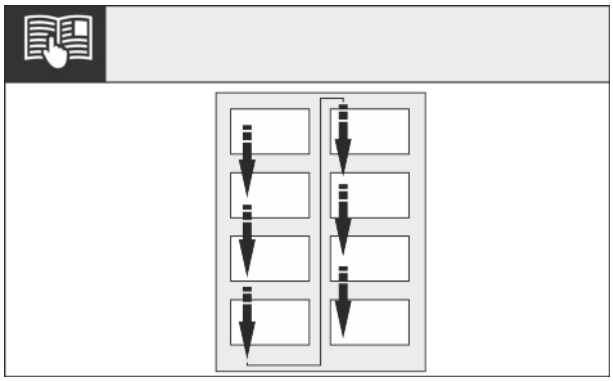

Fig. 6

▶ Follow the steps in order.

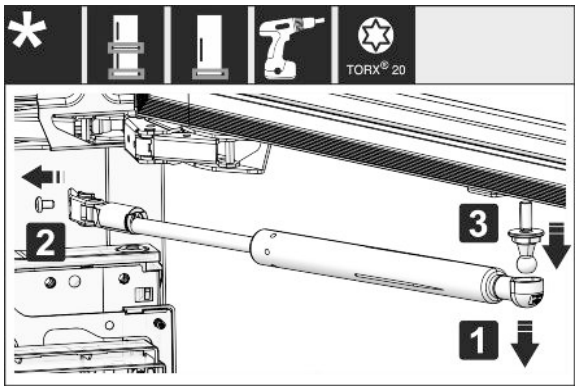

Fig. 7

▶ Removing the soft stop damper: Remove the soft stop damper from the ball stud (1). Unscrew the retainer (2). Remove the ball stud with a screwdriver (3).

*** Depending on model and options**

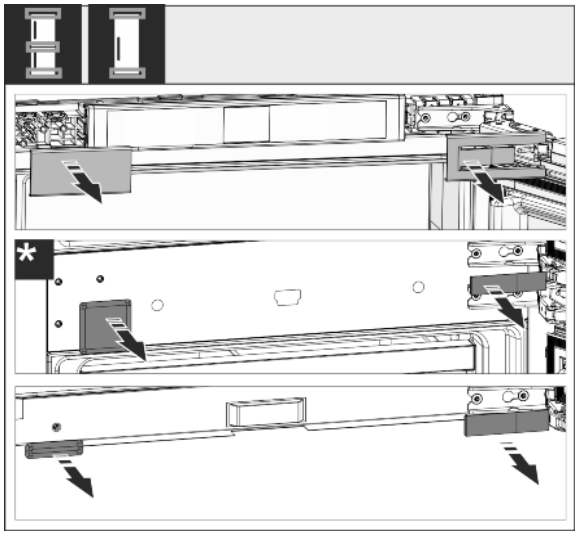

Fig. 8

▶ Remove covers.

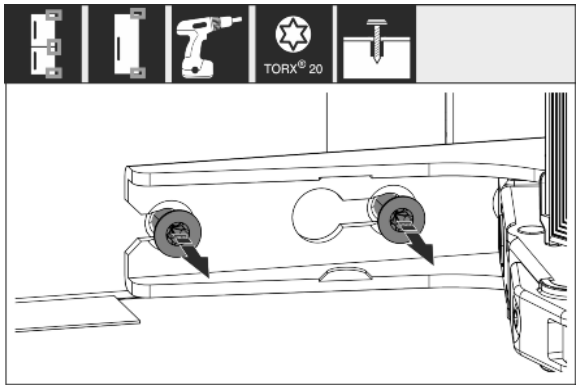

Fig. 9

▶ Loosen the screws on **all** hinges but do not remove them.

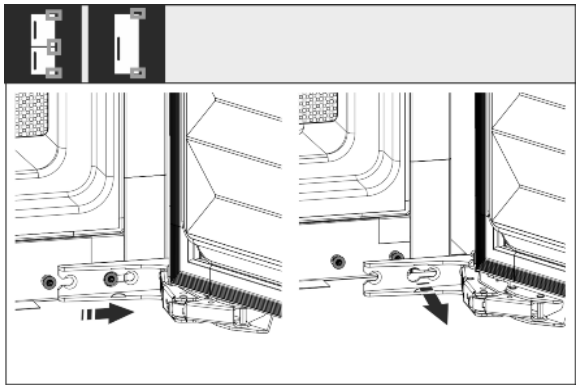

Fig. 10

▶ Removing the door: Push the door forward and then out, unhang it and put it to one side.

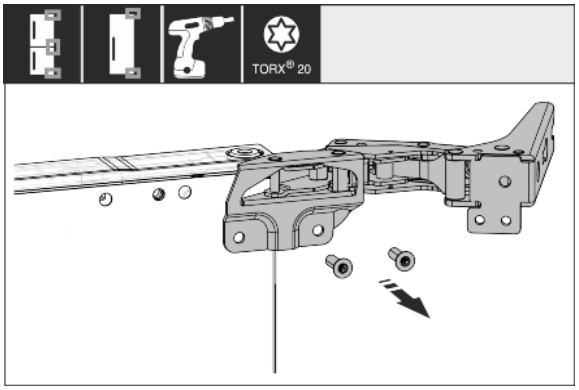

Fig. 11

▶ Unscrew all hinges and set aside together with the screws.

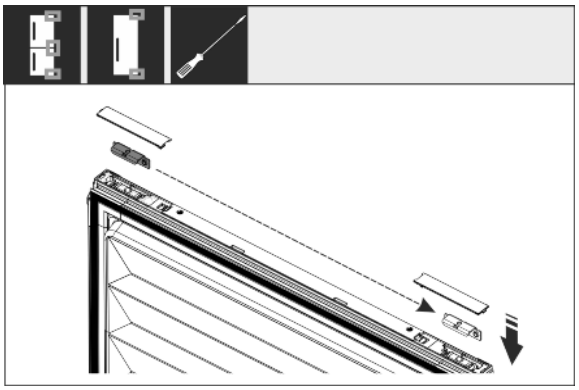

Fig. 12

▶ Loosen and shift the bracket at the top and bottom of the door. The bracket must be shifted so you can screw on the hinges.

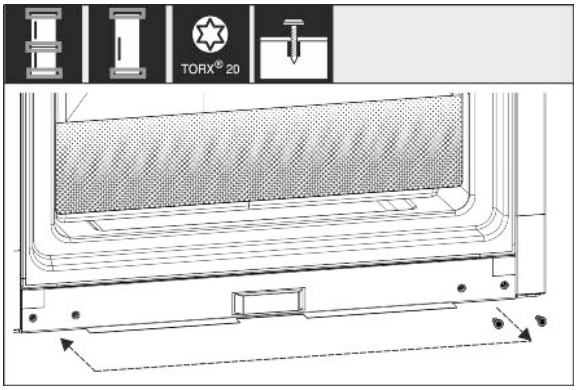

Fig. 13

▶ Shift the screws to fasten the hinge. Do not screw tightly after shifting – you need to hang the hinges later.

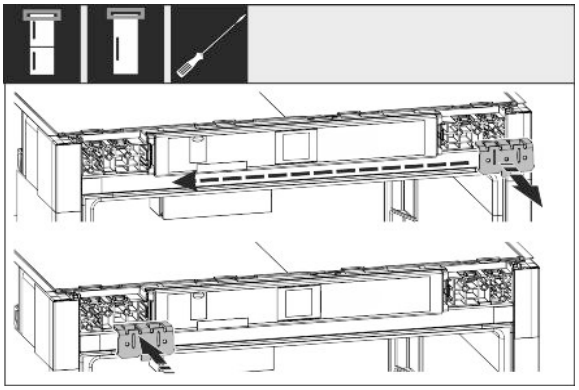

Fig. 14

▶ Move the fixing bracket to the opposite side.

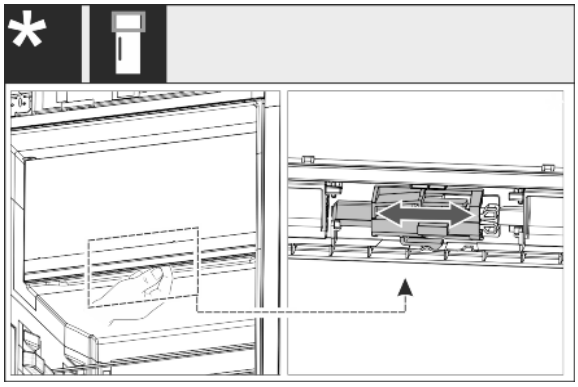

Fig. 15

▶ For one-door appliances: Change the door stop of the 4-star compartment by moving the lever. The door of the 4-star compartment must be closed. Move the lever from the bottom of the back of the door.

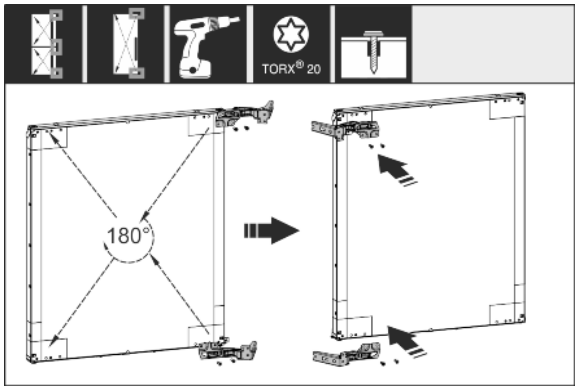

Fig. 16

▶ Turn all hinges 180° to the opposite side and screw firmly.

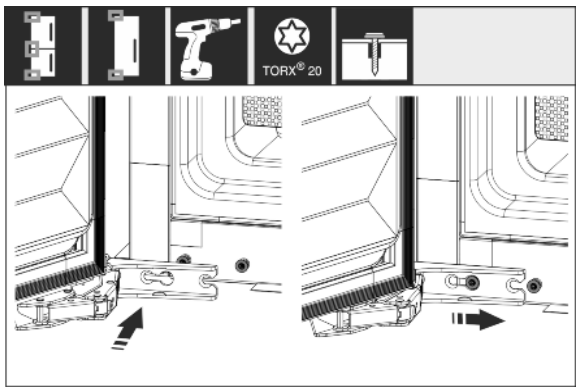

Fig. 17

▶ Refitting the door: Hang the door with its hinges and tighten the screws.

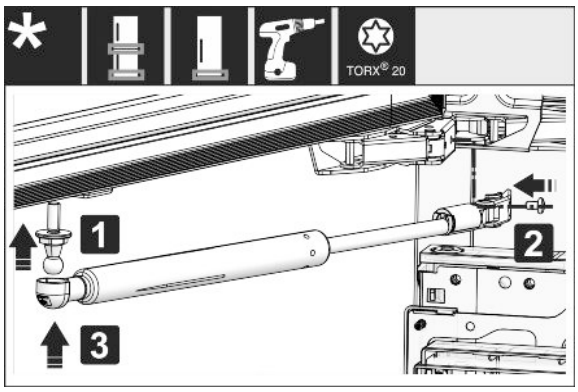

Fig. 18

▶ Refitting the closing dampers: Screw in the ball studs (1), tighten the bracket (2) and hang the closing dampers in the ball studs.

▶ Check all screws and retighten if necessary.

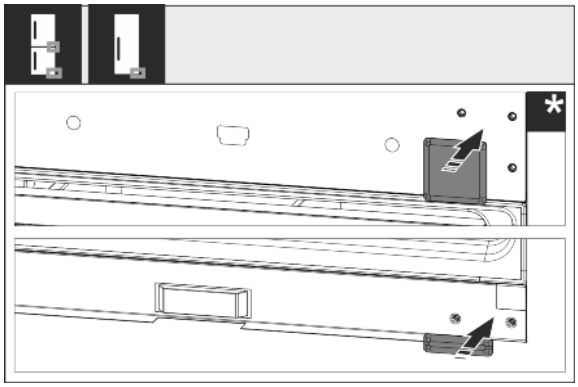

Fig. 19

▶ Reassemble the bottom and centre cover. Only replace the remaining covers after installing the appliance back into the cabinet.

12 Water connection*

WARNING

Electricity in combination with water!

Electric shock.

▶ Before connecting to the water pipe: Disconnect the appliance from the mains.

▶ Before connecting to water supply lines: Shut off the water supply.

▶ The connection to the drinking water mains may only be carried out by a qualified gas and water engineer.

WARNING

Unclean water!

Contaminants.

▶ Only connect to the drinking water supply.

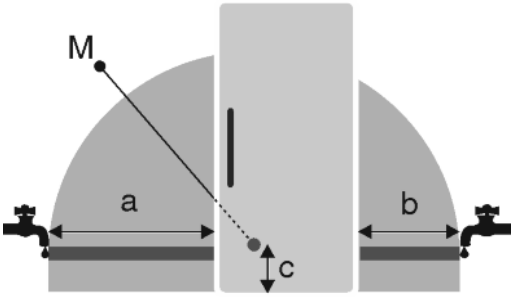

Fig. 20

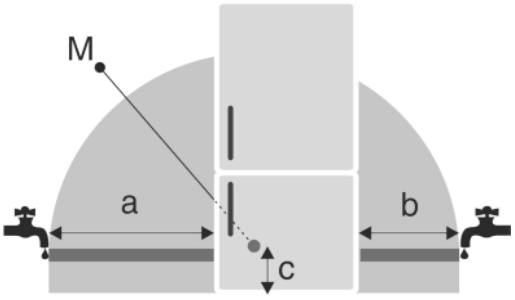

Fig. 20

a	b	c	M
~ 1200 mm	~ 1200 mm	~ 55 mm	Solenoid valve

The appliance's water connection and inlet solenoid valve are suitable for a water pressure of up to 1 MPa (10 bar).

Specifications for proper operation (flow rate, ice cube size, noise level):

Water pressure:	
bars	MPa
1.5 - 6.2	0.15 - 0.62

Water pressure when using the water filter:	
bars	MPa
2.8 - 6.2	0.28 - 0.62

If the pressure exceeds 0.62 MPa (6.2 bar): Activate the pressude reducer first.

Ensure that the following conditions are met:

- ❑ Water pressure is maintained.
- ❑ The water must be connected to the appliance via a cold water pipe that can withstand the operating pressure and complies with hygiene standards.
- ❑ Enclosed hose is used. Old hoses are disposed of.
- ❑ A filter with a seal is located in the hose connector.
- ❑ A stopcock must be provided between the hose line and the domestic water connection to cut off the water supply if necessary.
- ❑ The stopcock must be located outside the back of the appliance and within easy reach so that the appliance can be placed as far back as possible and the stopcock can be turned off quickly. Distances are adhered to.
- ❑ All devices and equipment used to supply water must comply with the regulations in force in the respective country.
- ❑ The back of the appliance must be accessible.
- ❑ Do not damage or kink the hose during installation.

13 Connecting the water supply

Connecting the hose to the appliance

The solenoid valve is at the bottom on the back of the appliance. It has a R3/4 connecting thread.

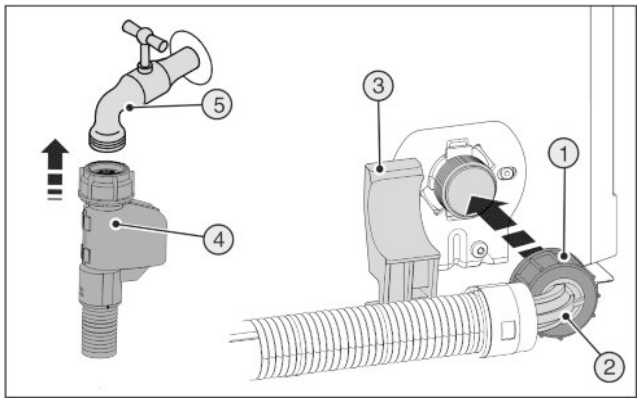

Fig. 21

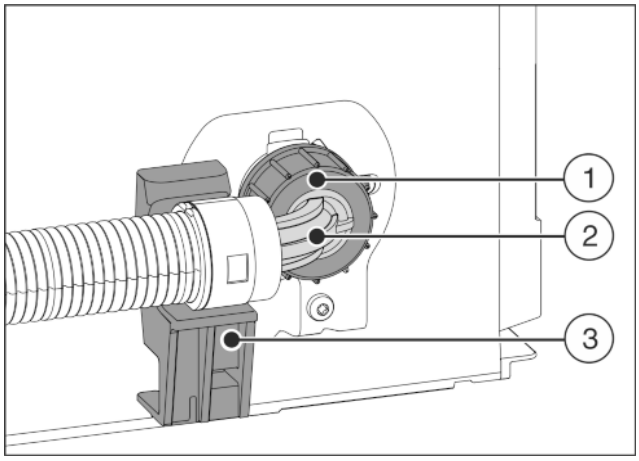

Fig. 22

▶ Hold the angled hose end *Fig. 22 (2)* horizontally at bracket *Fig. 22 (3)* and secure it.
▶ Screw the nut *Fig. 22 (1)* on by hand until it is firmly in place.

Connecting the hose to the stopcock

▶ Connect the straight end of the hose *Fig. 21 (4)* to the stopcock *Fig. 21 (5)*.

Check the water system

▶ Slowly open the stopcock.
Before putting into its final position:
▶ Check the entire water system for tightness.
After installing in the recess:
▶ Clean the IceMaker (see User Guide, Maintenance).
▶ Clean the IceMaker (see User Guide, Maintenance).

Air the water system

Airing is required in the following cases:

- Initial operation
- Replacing the InfinitySpring water tank

Ensure that the following conditions are met:

- Appliance is properly installed and connected
- Water tank is inserted (see User Guide, Maintenance)
- Water filter is in place (see the User Guide, Maintenance)
- Appliance is on

▶ Open the appliance door.
▶ Press your drinking glass or cup against the lower part of the InfinitySpring dispenser.
▷ The top part moves out and air or water pours into the glass.
▶ Continue until the water flows evenly into the glass.
▷ There is no more air in the system.
▶ InfinitySpring Cleaning (see the User Guide, Maintenance).

14 Installing the appliance in the recess

Tool

Installing the appliance in the recess

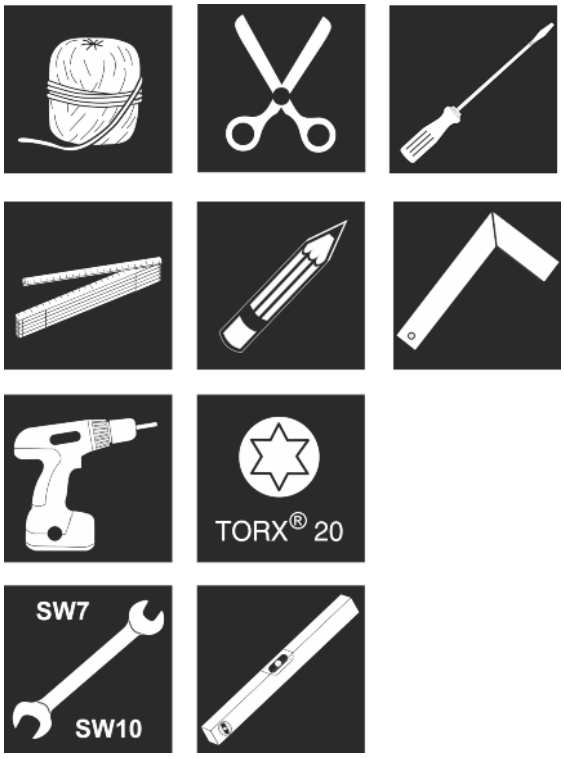

Fig. 23

Supplied assembly parts

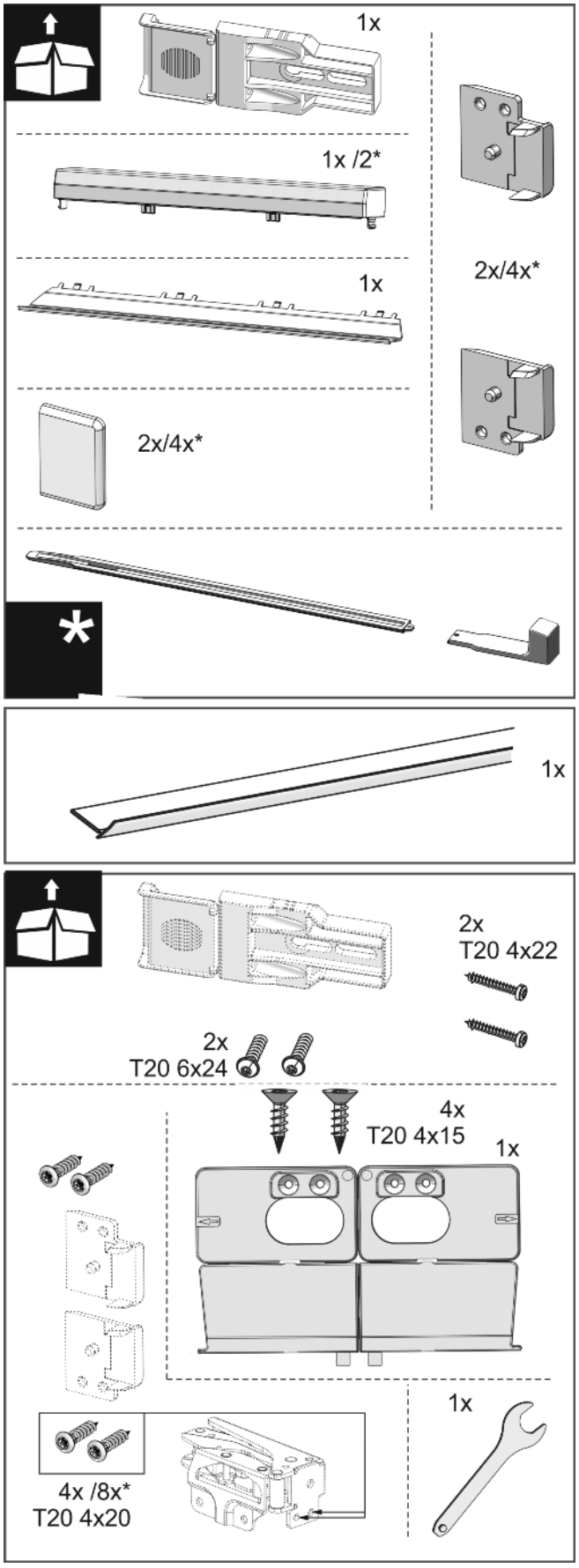

Fig. 24

*** Depending on model and options**

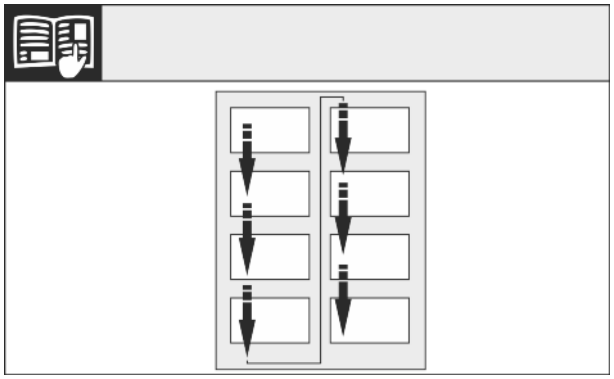

Fig. 25

▶ Follow the steps in order.

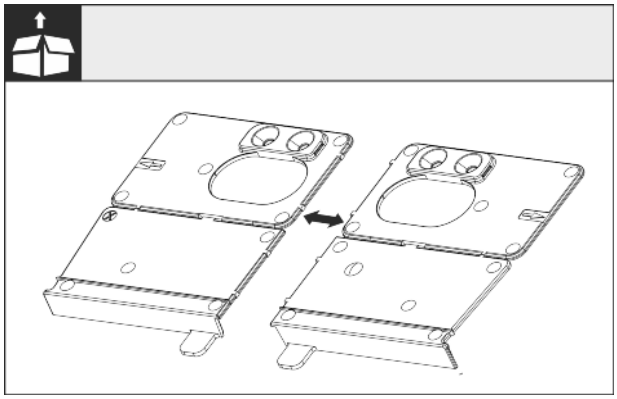

Fig. 26

▶ Separate the mounting bracket at the perforation.

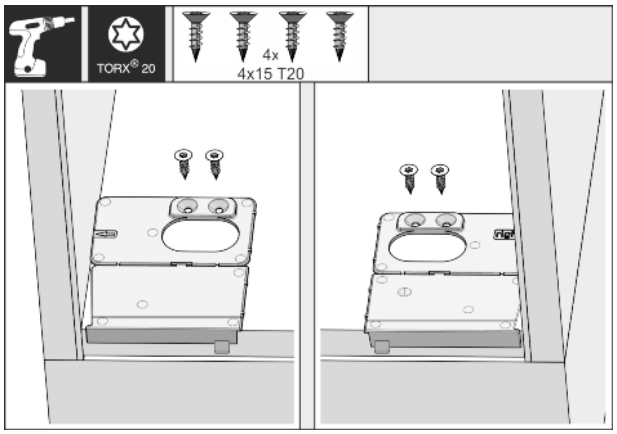

Fig. 27

NOTICE

Correct installation depth of the appliance.

▶ Using the mounting bracket ensures the correct installation depth of the appliance.

▶ Screw the mounting brackets on the left and right of the recess floor, flush to the side wall.

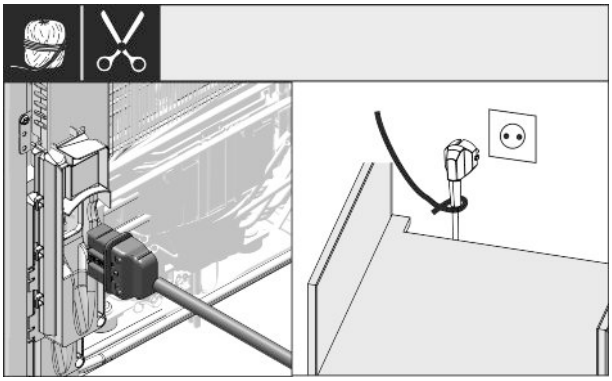

Fig. 28

▶ Remove the power cable from the package and plug it into the back of the appliance. Use a cable lug to lay the power plug cord to the accessible socket.

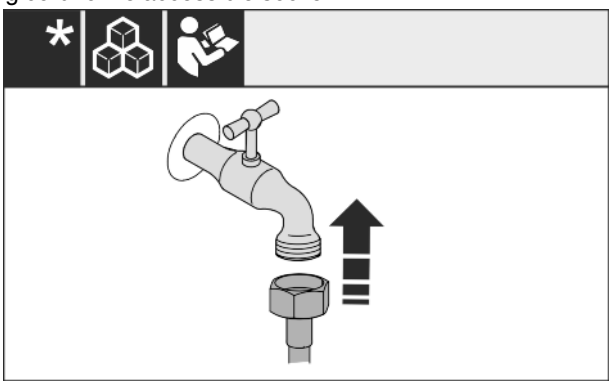

Fig. 29

▶ If necessary, install the water connection at this point, following the instructions in the User Guide.

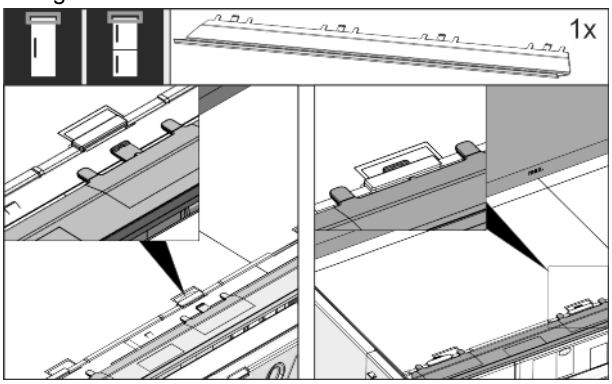

Fig. 30

▶ Insert the adapter panel on the top of the appliance. The panel can be moved to both sides.

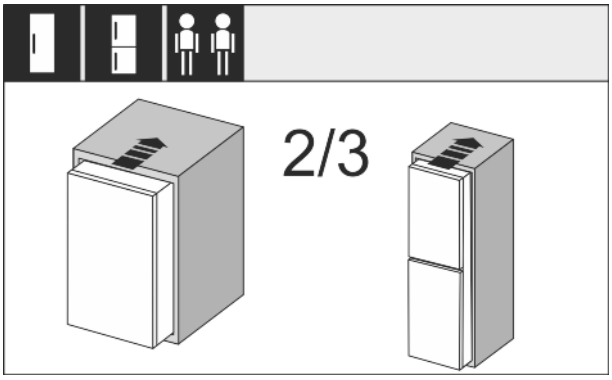

Fig. 31

▶ Insert the appliance 2/3 of the way into the recess.

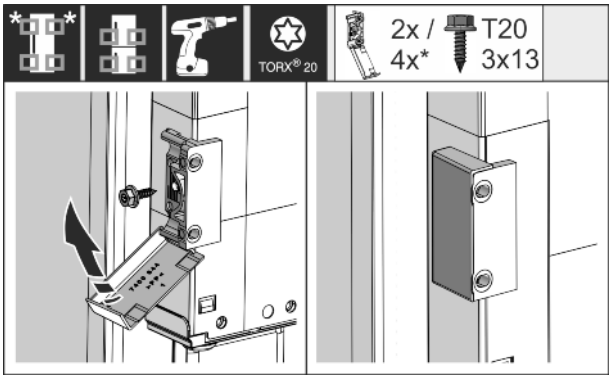

Fig. 32

▶ Assemble the mounting bracket. Attach the mounting brackets to align with the cabinet door handles. If the door is large use four mounting brackets in total. After assembly, fold the covers onto the bracket.

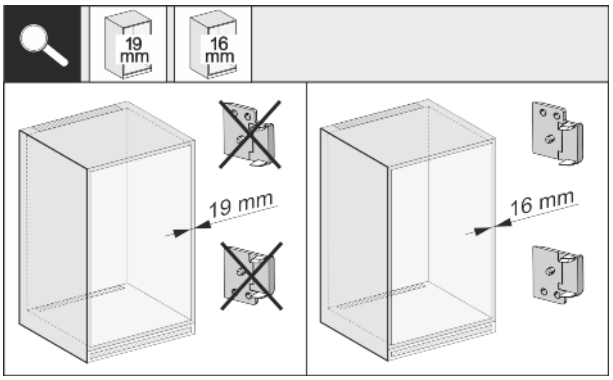

Fig. 33

▶ Check whether the cabinet side wall is 16 mm or 19 mm thick.

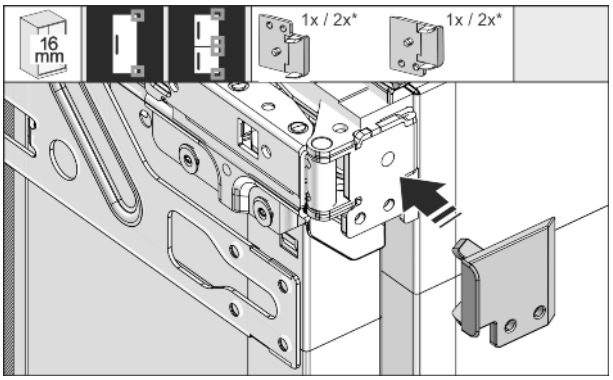

Fig. 34

▶ For 16-mm thick cabinet walls: Spacer on all hinges. For 19-mm thick cabinet walls, no spacer is required.

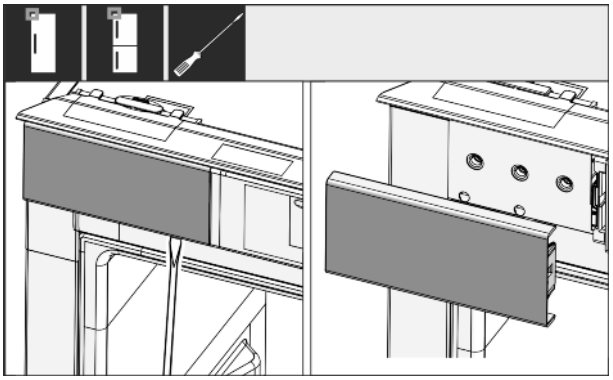

Fig. 35

▶ Use a screwdriver to loosen the cover at the top left and then remove it.

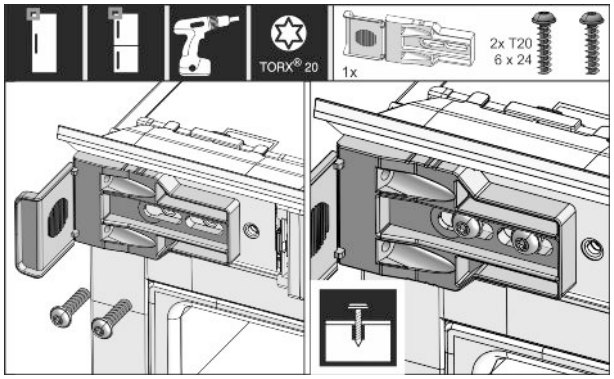

Fig. 36

▶ Loosely tighten the mounting bracket screw. The bracket should still be easy to move.

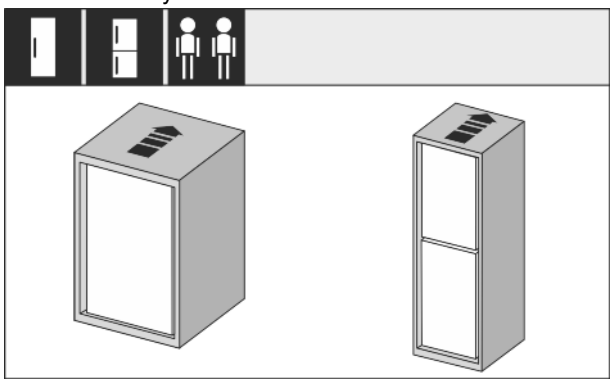

Fig. 37

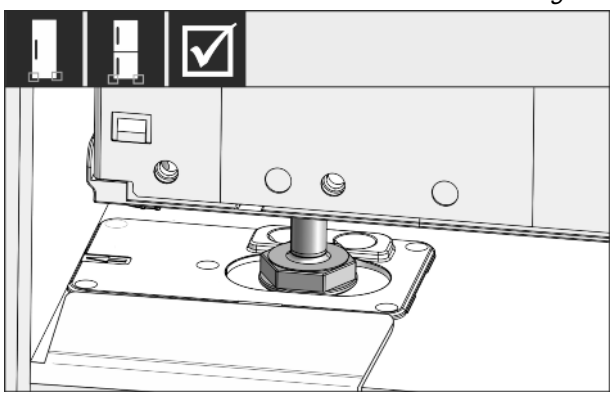

Fig. 38

▶ Insert the appliance all the way into the recess. The adjustable feet must sit on both sides in the recesses of the stopper brackets.

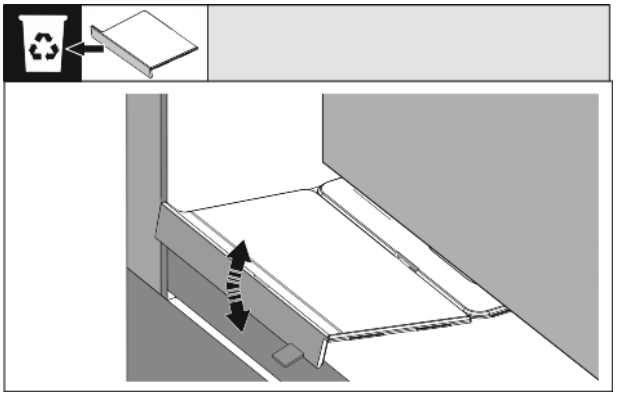

Fig. 39

▶ Remove the stopper on the mounting bracket base. Loosen the stopper by moving it and, if necessary, pull it off with the help of pliers.

*** Depending on model and options**

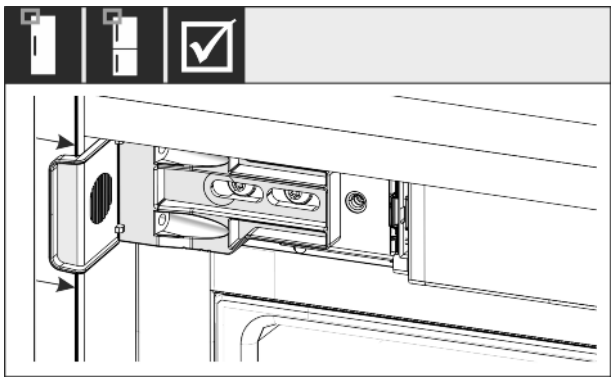

Fig. 40

▶ Check that the appliance is flush against the cabinet recess. The mounting bracket must be attached to the side wall of the cabinet recess.

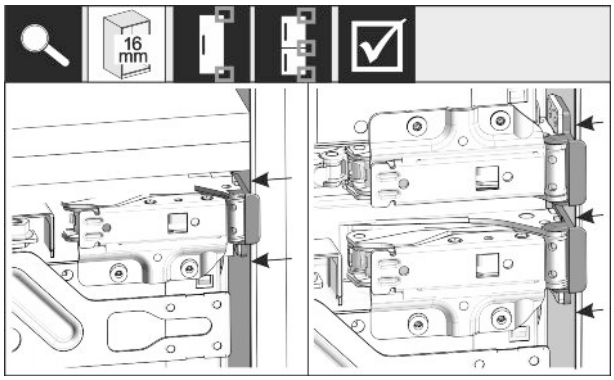

Fig. 41

▶ With 16-mm thick cabinet side walls, the spacers must act as stoppers on the cabinet recess on the hinge side.

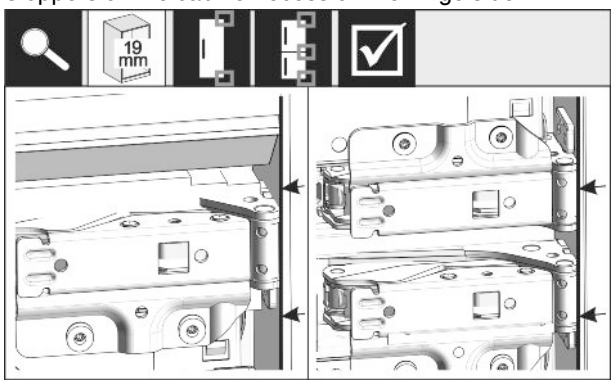

Fig. 42

▶ With 19 mm thick cabinet side panels, align the front edges of the hinges so that they are flush with the front of the cabinet side panel.

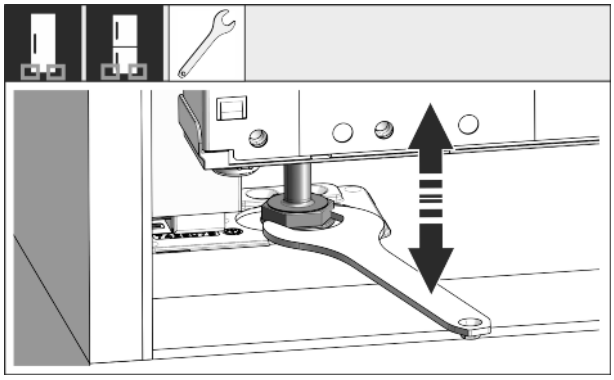

Fig. 43

▶ If necessary, use the adjustable feet to correct the tilt of the appliance.

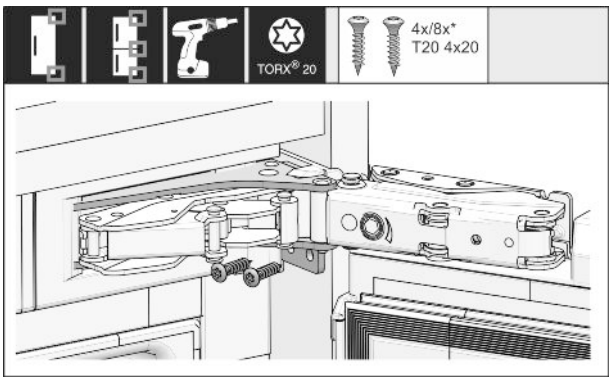

Fig. 44

▶ Secure the appliance on the hinge side.

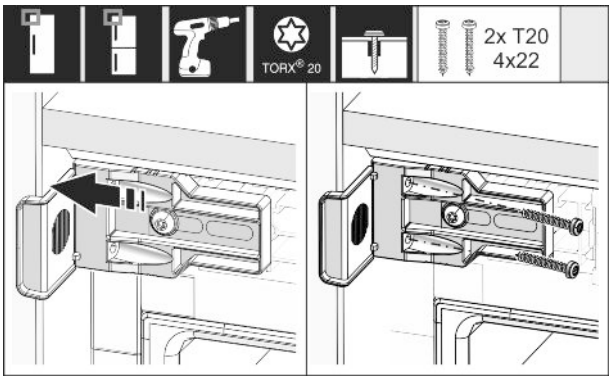

Fig. 45

▶ Move the bracket so it sits flush on the side wall of the cabinet recess. Tighten all screws securely.

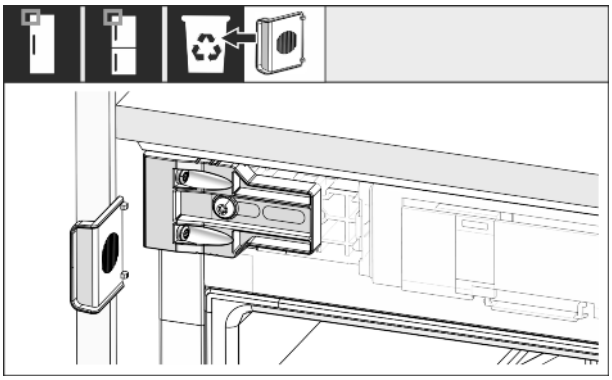

Fig. 46

▶ Remove the stop from the bracket on the handle side and dispose of it.

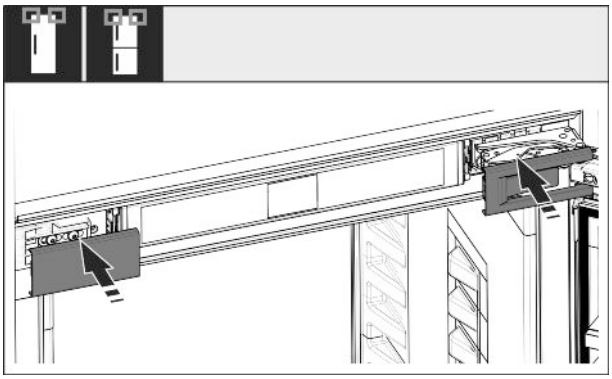

Fig. 47

▶ Put covers into position.

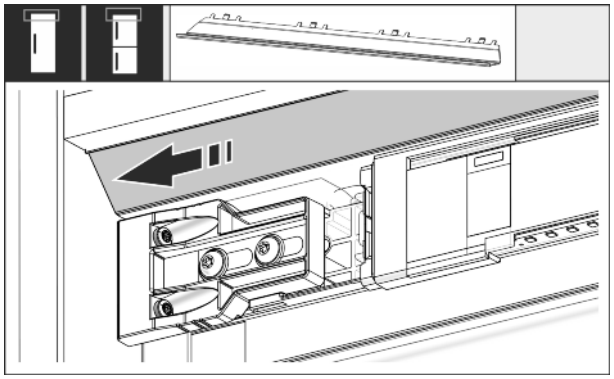

Fig. 48

▶ Slide the panel so that it sits flush on the side of the cabinet wall.

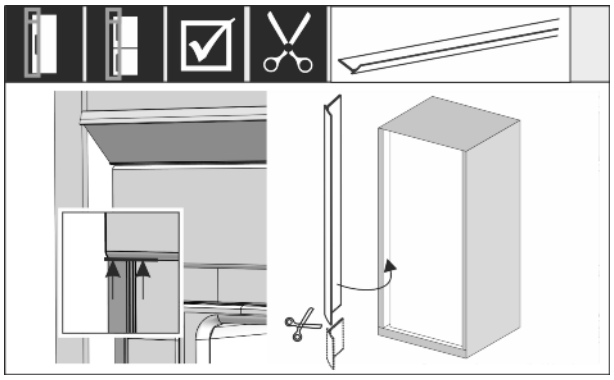

Fig. 49

▶ The trim is magnetic. Place the trim below the top cover and press. If necessary, shorten the trim to the required length with a sharp pair of scissors.

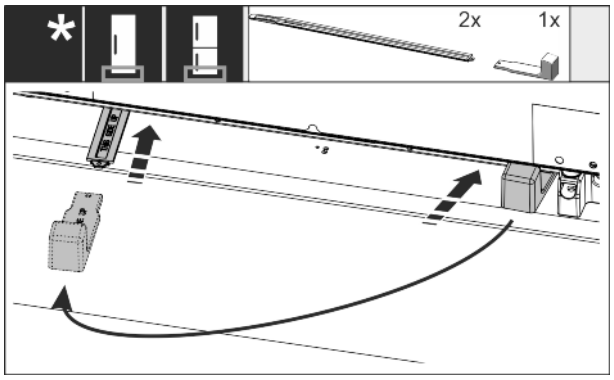

Fig. 50

The height adjustment is only supplied as standard from a recess height of 140 cm and is used to optimise noise levels.

▶ To stabilise the back of the appliance at the bottom: Insert the handle to the rail of the height adjustment and slide the rail into the appliance base. Remove the handle and do the same with the second rail.

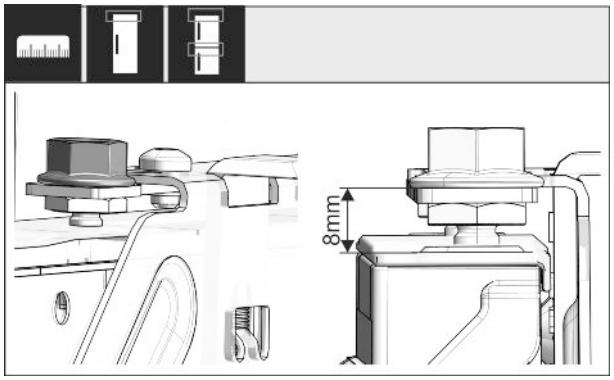

Fig. 51

▶ Close the door and check the preset 8 mm from the upper edge of the appliance door to the crosspiece support

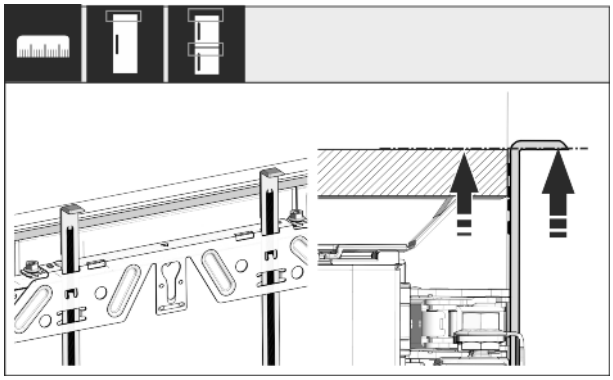

Fig. 52

▶ Push the assembly aids to the unit door height. Lower stop edge of the assembly aid = upper edge of the door to be assembled.

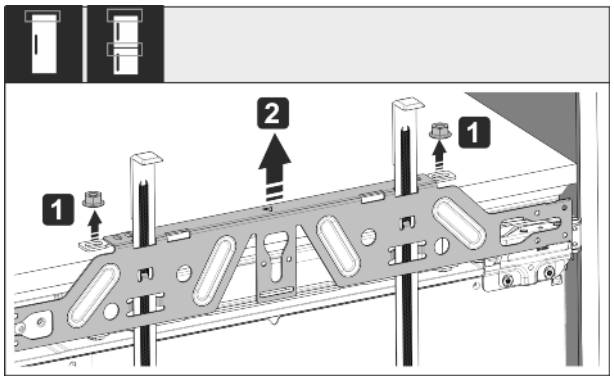

Fig. 53

▶ Loosen the counter nut and remove the crosspiece.

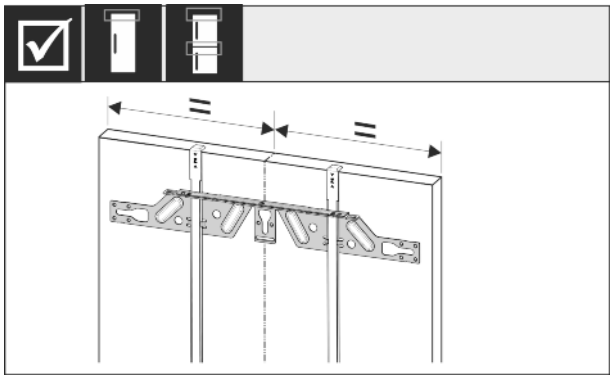

Fig. 54

▶ Hang the crosspiece on the inside of the unit door and make sure it is central.

*** Depending on model and options**

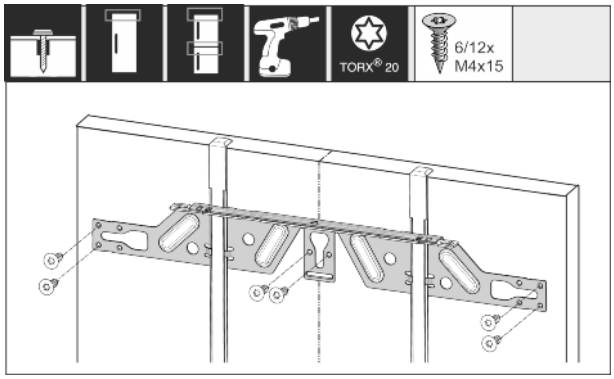

Fig. 55

▶ With chipboard doors fit the crosspiece with at least 6 screws and at least 4 screws for the frame and panel doors.

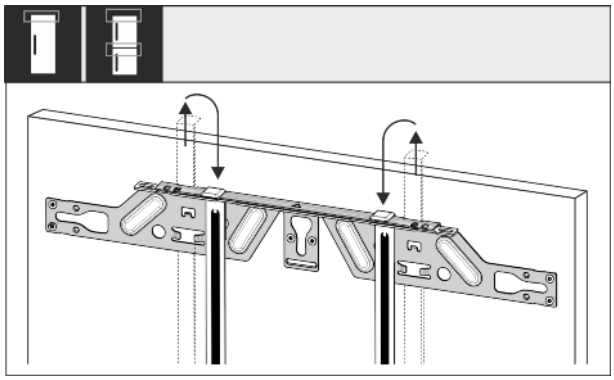

Fig. 56

▶ Remove the fitting aids, turn round and insert into the adjacent opening.

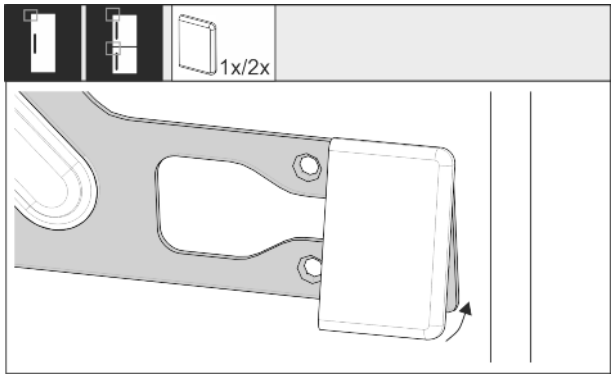

Fig. 57

▶ Clip the cover on the crosspiece on the handle side.

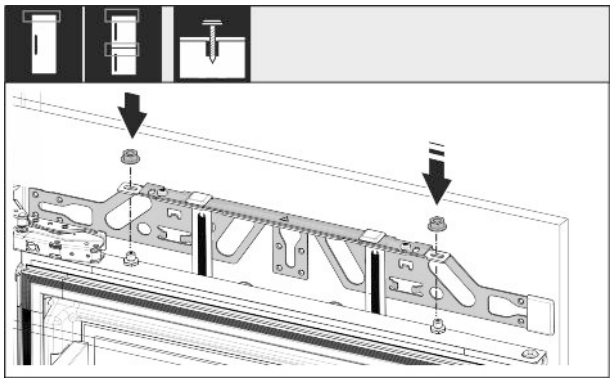

Fig. 58

▶ Attach the unit door and loosely screw the lock nuts onto the adjusting bolts.

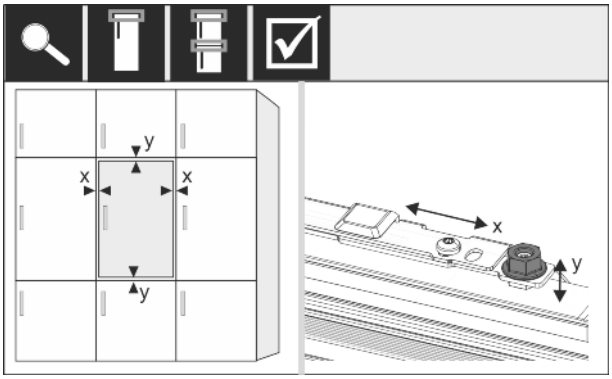

Fig. 59

▶ Align the unit door in the X and Y direction using the adjusting bolts.

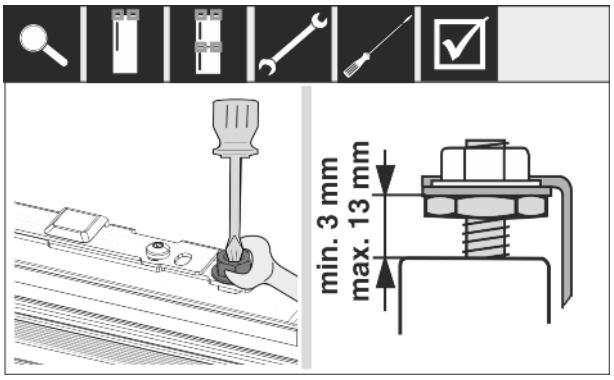

Fig. 60

▶ Screw on the counter nuts and check the height.

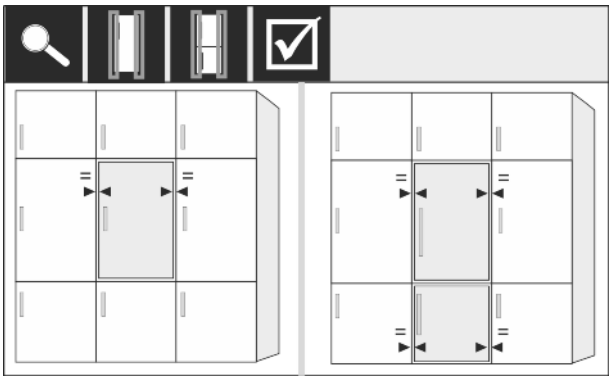

Fig. 61

▶ Check the gap between the door and the surrounding unit doors. For cabinet fronts that are thicker than 19 mm, refer to the dimensions and notes in the section **Cabinet fronts**.

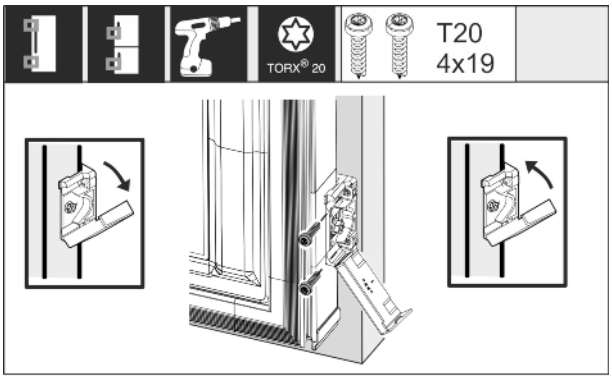

Fig. 62

▶ Open the cover again to assemble the mounting bracket on the unit door. Align the front edge of the mounting bracket parallel to the unit door edge and screw the bracket down tightly. Fold up the cover again.

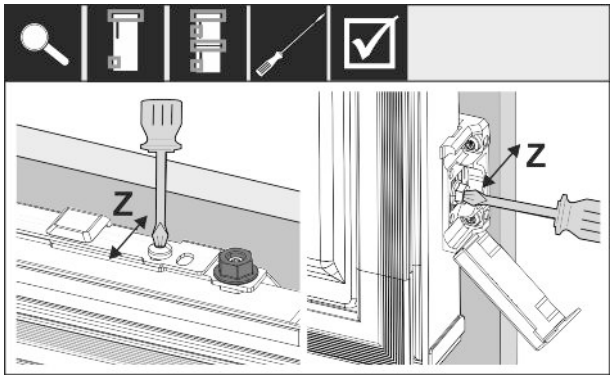

Fig. 63

▶ Align the unit door in the Z direction: Undo the adjusting screw on the crosspiece and the screw on the mounting bracket then move the door.

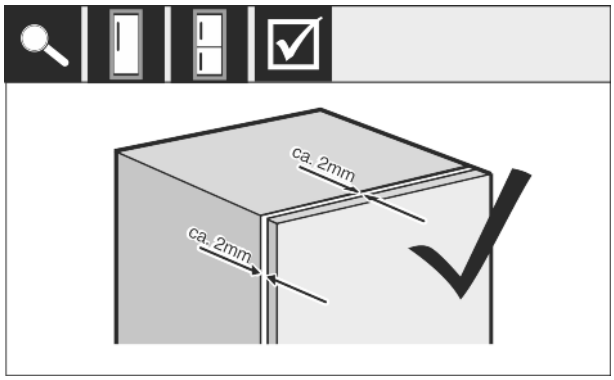

Fig. 64

▶ Check the distance between the unit door and the unit body. Check all screws and retighten if necessary.

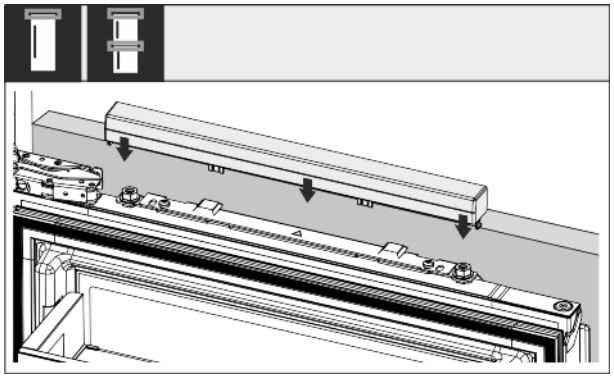

Fig. 65

▶ Clip the top cover on.

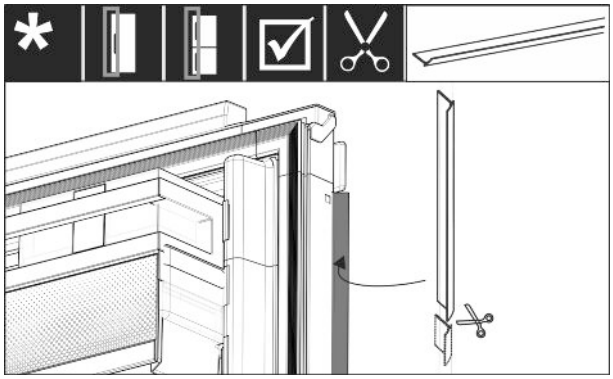

Fig. 66

▶ Adjust the tread, cut it to length and place it between the cabinet door and the appliance door.

Check the following points to make sure the appliance is installed correctly. Otherwise, icing up, the formation of condensate and malfunctions may occur:

▷ The door must close properly.
▷ The unit door must not touch the body of the unit.
▷ The seal on the upper corner on the handle side must be fitted securely.

15 Cabinet fronts

15.1 Dimensions

Depending on your model, you will need one or two cabinet doors. The size of the cabinet door(s) depends on the overall recess size and cabinet unit thickness.

Note
Observe the appliance and recess dimensions as well as installation diagrams (see 3 Appliance dimensions) and (see 4 Recess dimensions) . Installation diagrams can be found in the appliance catalogue.

General requirements:

- Please refer to our catalogues for appliance-specific recommendations on size and weight for fixed door installations.
- The cabinet unit thickness should be at least 16 mm and no bigger than 19 mm.
- For a two-door cabinet door installation, pay attention to the position of the clearance gap (see Fig. 1077) .

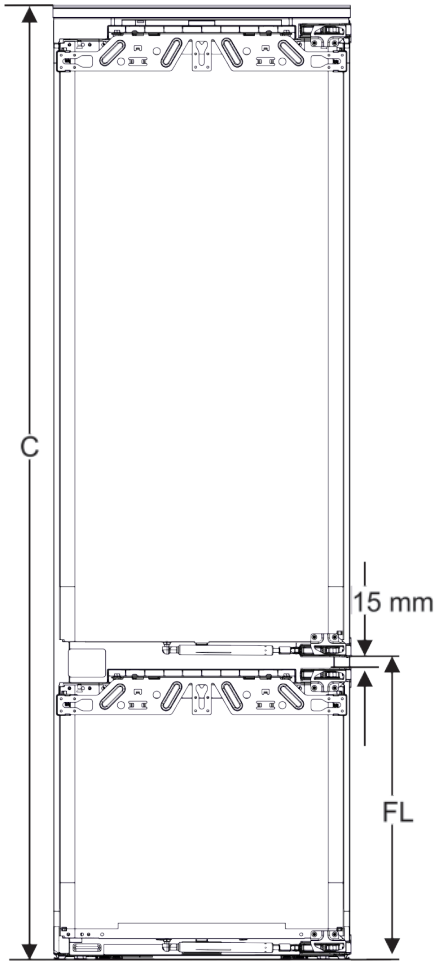

Fig. 67 Clearance gap position for two-door cabinet front

Recess height	Appliance height (C) (mm)	Clearance gap position (FL) for fixed doors (mm)
178-2 drawers	1770	549 +15
178-3 drawers	1770	695 +15

Other cabinet door above, below or next to it:

- Vertical gap between cabinet doors must be 4 mm.
- Horizontal gap between cabinet doors must be 4 mm. Check the collision properties here (see 15.3 Setting the clearance to avoid collision) .

Weight and hinges:

- Heavy cabinet fronts increase the stress on the hinge. The hinge may be damaged. As such, refer to the catalogue for the maximum weight specification for your appliance.
- If the cabinet front exceeds the maximum permitted weight, an appliance with door-tracking device can help by loading the weight over several concealed hinges on the cabinet.
- If you have long cabinet fronts that protrude a long way above the appliance, we recommend an additional door hinge (e.g. Kamat), which by design has the same pivot point as the fixed door hinge used by Liebherr appliances. Using an additional hinge (Kamat) loads the weight over multiple points. We recommend using a milled adapter fitting for high cabinet fronts to counteract any dragging (convex/ concave).

15.2 Mounting the cabinet front(s)

When installing, note:

- Cabinet front must be installed symmetrically to the refrigerator door.
- Adjoining cabinet front is exactly level.
- Adjoining cabinet front has the same edge radius as the front of the appliance.
- Cabinet front is flat and tension-free.
- Cabinet front is adjusted to a minimum depth of approx. 2 mm to the unit body.

▶ Fit the appliance into the recess (see 14 Installing the appliance in the recess) .

▶ Attach the cabinet front to the appliance door (see 14 Installing the appliance in the recess) .

▶ Check the cabinet front does not collide with anything (see 15.3 Setting the clearance to avoid collision) .

15.3 Setting the clearance to avoid collision

After installing the cabinet front(s), check that the cabinet fronts do not collide.

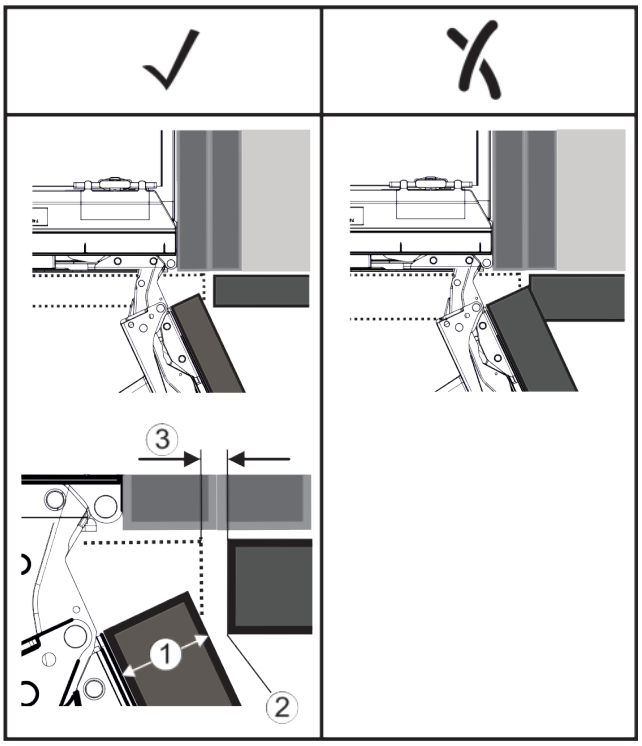

Fig. 68
(1) Front thickness (FD) **(3)** Clearance (S)
(2) Edge radius (R)

	R (2) = 0 mm (scharfkantig)		R = 1,2 mm		R = 2 mm		R = 3 mm	
FD(1) in mm	Gmin	Gmax	Gmin	Gmax	Gmin	Gmax	Gmin	Gmax
16	0,3	0,9	0,1	0,4	0,1	0,2	0,1	0,2
19	0,7	2,4	0,3	1,9	0,23	3,25	0,1	0,8
20	2	4,3	1,5	3,6	1	3,1	0,6	2,7
22	3,5	6,3	3	5,6	2,6	5,3	2,1	4,6
24	5,5	8,3	5	7,8	4,5	7,4	4	6,9
26	7,6	10,7	7	10,3	6,6	9,9	6,2	9,4

Fig. 69 Table of clearance limits

G_{min} = minimum clearance limit in mm

G_{max} = maximum clearance limit in mm

Note
When making adjustments, always make sure that the cabinet front suits the general appearance.

Check the collision factors and adjust them accordingly:

▶ Determine the front thickness and edge radius.

▶ Refer to the table *Fig. 69 (Grenzbereich)* for the clearance size.

▶ Check the clearance size against the table.

▶ Do one of the following depending on the measured clearance size.

Clearance	Description
$S > G_{max}$	If the clearance size is greater than the two limits, you do not need to make any adjustments.
$S < G_{min}$	If the clearance size is below the limits, you must increase it. Another option is to increase the edge radius.
$G_{min} \leq S \leq G_{max}$	If the clearance is between the two limits, you have to be careful. This will quickly lead to collisions.

16 Connecting the appliance

WARNING
Failure to connect properly
Fire hazard.
▶ Do not use an extension cable.
▶ Do not use distributor blocks.

NOTICE
Failure to connect properly
Damage to the electronics.
▶ Do not use a standalone inverter.
▶ Do not use an energy saving plug.

Note
Only use the power connection lead supplied.
▶ A longer power connection lead can be ordered from Customer Service.

Ensure that the following conditions are met:

- The type of current and voltage at the installation site complies with the information on the type plate .
- The socket is earthed according to the regulations and fused.
- The fuse tripping current is between 10 and 16 A.
- The socket is easily accessible.
- The socket is outside the back of the appliance area in the specified area *(a, b, c)*.

▶ Check the electrical connection.
▶ Insert the appliance plug *(G)* into the back of the appliance. Ensure that it clicks into place.
▶ Connect the power plug to the power supply.
▷ The Liebherr logo appears on the screen.
▷ The display switches to the standby symbol.

home.liebherr.com/fridge-manuals

EN built-in fridges and freezers, fixed door

Issue date: 20210309
Part number index: 7088230-00

Liebherr-Hausgeräte Ochsenhausen GmbH
Memminger Straße 77-79
88416 Ochsenhausen
Deutschland