SIEMENS

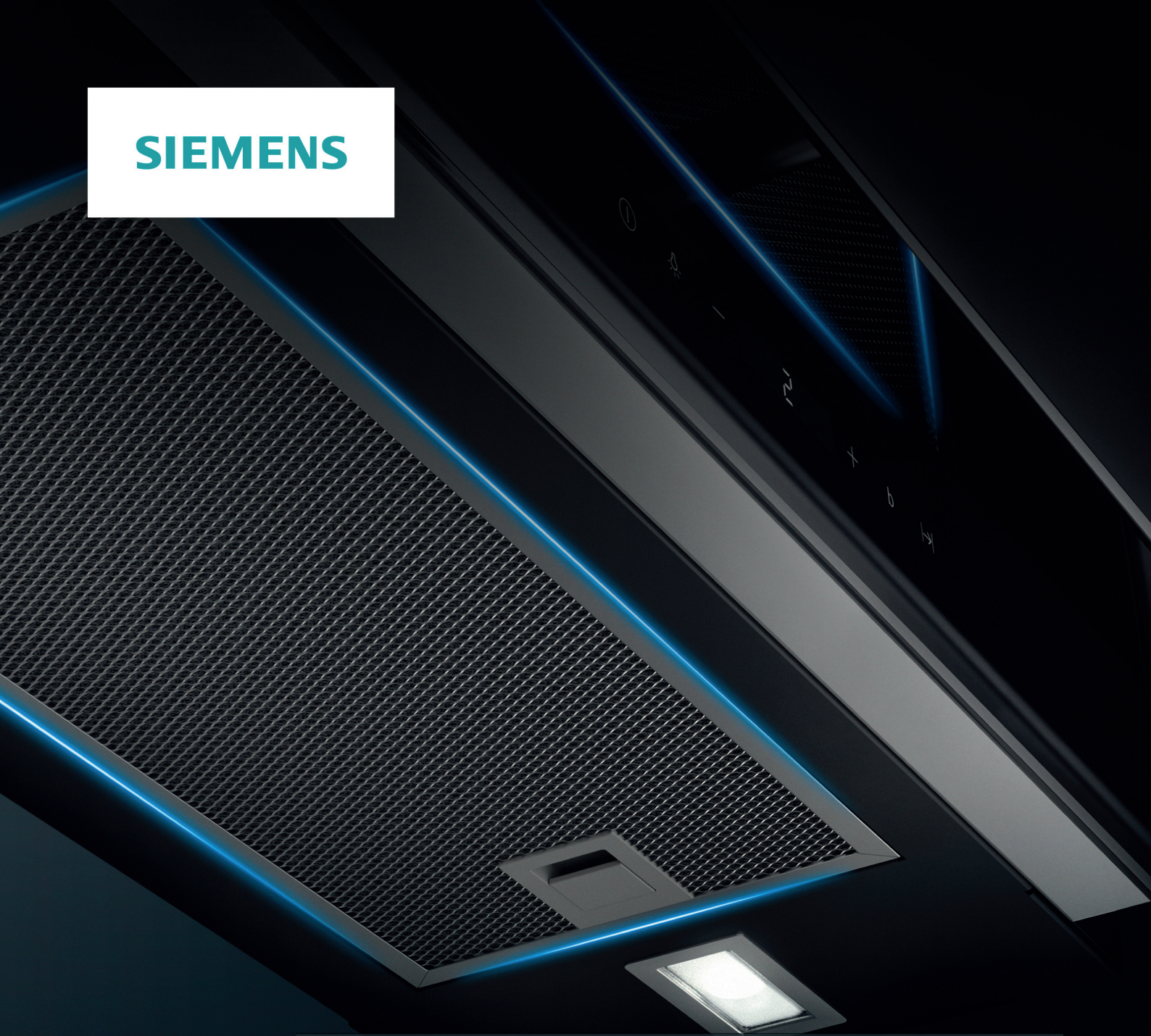

Extractor hood

[en] Instructions for installation and use

Register your product on My Siemens and discover exclusive services and offers.
siemens-home.bsh-group.com/welcome

The future moving in.

Siemens Home Appliances

en Table of contents

INSTRUCTION MANUAL 3
Intended use 3
Important safety information 4
Environmental protection 6
Operating modes 6
Operating the appliance 7
Cleaning and maintenance 7
Trouble shooting 9
Customer service 9
INSTALLATION INSTRUCTIONS 10
Important safety information 10
General information 13
Installation 14

INSTRUCTION MANUAL

Additional information on products, accessories, replacement parts and services can be found at **www.siemens-home.bsh-group.com** and in the online shop **www.siemens-home.bsh-group.com/eshops**

Intended use

Read these instructions carefully. Only then will you be able to operate your appliance safely and correctly. Retain the instruction manual and installation instructions for future use or for subsequent owners.

The appliance can only be used safely if it is correctly installed according to the safety instructions. The installer is responsible for ensuring that the appliance works perfectly at its installation location.

This appliance is intended for domestic use and the household environment only. The appliance is not intended for use outside. Do not leave the appliance unattended during operation. The manufacturer is not liable for damage which is caused by improper use or incorrect operation.

This appliance is intended for use up to a maximum height of 2000 metres above sea level.

This appliance may be used by children over the age of 8 years old and by persons with reduced physical, sensory or mental capacity or by persons with a lack of experience or knowledge if they are supervised by someone who is responsible for their safety, or have been instructed in how to use the appliance safely and have understood the risks involved in not using it properly.

Children must not play with the appliance.Cleaning and user maintenance must not be performed by children unless they are over 15 years of age and are supervised.

Keep children below the age of 8 years old at a safe distance from the appliance and power cable.

Check the appliance for damage after unpacking it. Do not connect the appliance if it has been damaged in transport.

This appliance is not intended for operation with an external clock timer or a remote control.

Important safety information

⚠ Warning – Danger of suffocation!
Packaging material is dangerous to children. Never allow children to play with packaging material.

⚠ Warning – Danger of death!
Risk of poisoning from flue gases that are drawn back in.
Always ensure adequate fresh air in the room if the appliance is being operated in exhaust air mode at the same time as room air-dependent heat-producing appliance is being operated.

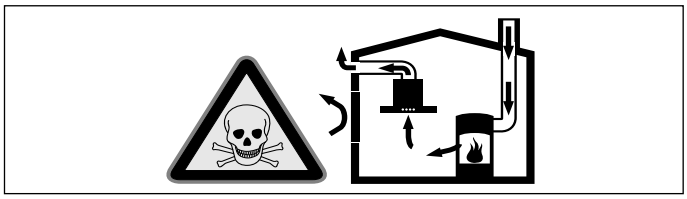

Room air-dependent heat-producing appliances (e.g. gas, oil, wood or coal-operated heaters, continuous flow heaters or water heaters) obtain combustion air from the room in which they are installed and discharge the exhaust gases into the open air through an exhaust gas system (e.g. a chimney).
In combination with an activated vapour extractor hood, room air is extracted from the kitchen and neighbouring rooms - a partial vacuum is produced if not enough fresh air is supplied. Toxic gases from the chimney or the extraction shaft are sucked back into the living space.

- Adequate incoming air must therefore always be ensured.
- An incoming/exhaust air wall box alone will not ensure compliance with the limit.

Safe operation is possible only when the partial vacuum in the place where the heat-producing appliance is installed does not exceed 4 Pa (0.04 mbar). This can be achieved when the air needed for combustion is able to enter through openings that cannot be sealed, for example in doors, windows, incoming/exhaust air wall boxes or by other technical means.

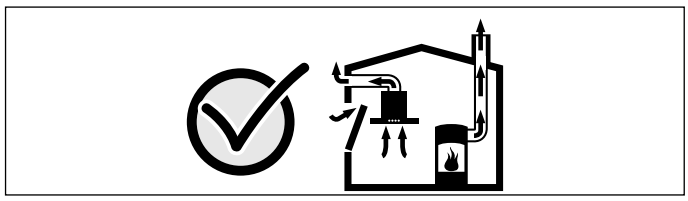

In any case, consult your responsible Master Chimney Sweep. He is able to assess the house's entire ventilation setup and will suggest the suitable ventilation measures to you.
Unrestricted operation is possible if the vapour extractor hood is operated exclusively in the circulating-air mode.

⚠ Warning – Risk of fire!

- Fatty deposits in the grease filter may catch fire. Regularly clean the grease filter. Never operate the appliance without a grease filter.
- Grease deposits in the grease filter may catch fire. Never work with naked flames close to the appliance (e.g. flambéing). Do not install the appliance near a heat-producing appliance for solid fuel (e.g. wood or coal) unless a closed, non-removable cover is available. There must be no flying sparks.
- Hot oil and fat can ignite very quickly. Never leave hot fat or oil unattended. Never use water to put out burning oil or fat. Switch off the hotplate. Extinguish flames carefully using a lid, fire blanket or something similar.
- When gas burners are in operation without any cookware placed on them, they can build up a lot of heat. A ventilation appliance installed above the cooker may become damaged or catch fire. Only operate the gas burners with cookware on them.
- Operating several gas burners at the same time gives rise to a great deal of heat. A ventilation appliance installed above the cooker may become damaged or catch fire. Never operate two gas burners simultaneously on the highest flame for longer than 15 minutes. One large burner of more than 5 kW (wok) is equivalent to the power of two gas burners.

⚠ Warning – Risk of burns!

- The accessible parts become very hot when in operation. Never touch hot parts. Keep children at a safe distance.
- The appliance becomes hot during operation. Allow the appliance to cool down before cleaning.

⚠ Warning – Risk of injury!

- Components inside the appliance may have sharp edges. Wear protective gloves.
- Items placed on the appliance may fall down. Do not place any objects on the appliance.
- The light emitted by LED lights is very dazzling, and can damage the eyes (risk group 1). Do not look directly into the switched on LED lights for longer than 100 seconds.

⚠ Warning – Risk of electric shock!

- A defective appliance may cause electric shock. Never switch on a defective appliance. Unplug the appliance from the mains or switch off the circuit breaker in the fuse box. Contact the after-sales service.
- Incorrect repairs are dangerous. Repairs may only be carried out and damaged power cables replaced by one of our trained after-sales technicians. If the appliance is defective, unplug the appliance from the mains or switch off the circuit breaker in the fuse box. Contact the after-sales service.
- Do not use any high-pressure cleaners or steam cleaners, which can result in an electric shock.
- Penetrating moisture may result in an electric shock. Clean the appliance using a damp cloth only. Before cleaning, pull out the mains plug or switch off the circuit breaker in the fuse box.

Causes of damage

Caution!

Risk of damage due to corrosion. Always switch on the appliance while cooking to avoid condensation. Condensate can produce corrosion damage.

Always replace faulty bulbs to prevent the remaining bulbs from overloading.

Risk of damage due to ingress of humidity into the electronic circuitry. Never clean operator controls with a wet cloth.

Surface damage due to incorrect cleaning. Clean stainless steel surfaces in the direction of the grain only. Do not use any stainless steel cleaners for operator controls.

Surface damage due to strong or abrasive cleaning agents. Never use strong and abrasive cleaning agents.

Risk of damage from returning condensate. Install the exhaust duct in such a way that it falls away from the appliance slightly (1° slope).

Risk of damage as a result of incorrect loading of design elements. Do not pull design elements.Do not place objects on the design elements or hang objects from them.

Caution!

There is a risk of surface damage if you do not peel off the protective film.Remove the protective film from all parts of the appliance before using the appliance for the first time.

Environmental protection

Your new appliance is particularly energy-efficient. Here you can find tips on how to save even more energy when using the appliance, and how to dispose of your appliance properly.

Saving energy

- During cooking, ensure that there is a sufficient supply of air to enable the extractor hood to work efficiently and with a low level of operating noise.
- Adjust the fan speed to the amount of steam produced during cooking. Only use intensive mode when required. The lower the fan speed, the less energy is consumed.
- If cooking produces large amounts of steam, select a higher fan speed in good time. If the cooking steam has already spread around the kitchen, the extractor hood will need to be operated for longer.
- Switch off the extractor hood if you no longer require it.
- Switch off the lighting if you no longer require it.
- Clean and (if required) replace the filter at regular intervals in order to increase the effectiveness of the ventilation system and to prevent the risk of fire.
- Put the lid on to reduce cooking steam and condensation.

Environmentally-friendly disposal

Dispose of packaging in an environmentally-friendly manner.

This appliance is labelled in accordance with European Directive 2012/19/EU concerning used electrical and electronic appliances (waste electrical and electronic equipment - WEEE). The guideline determines the framework for the return and recycling of used appliances as applicable throughout the EU.

Operating modes

Exhaust air mode

The air which is drawn in is cleaned by the grease filters and conveyed to the exterior by a pipe system.

Note: The exhaust air must not be conveyed into a functioning smoke or exhaust gas flue or into a shaft which is used to ventilate installation rooms which contain heat-producing appliances.

- Before conveying the exhaust air into a non-functioning smoke or exhaust gas flue, obtain the consent of the heating engineer responsible.
- If the exhaust air is conveyed through the outer wall, a telescopic wall box should be used.

Circulating-air mode

The air which is drawn in is cleaned by the grease filters and an activated carbon filter and conveyed back into the kitchen.

Note: To bind odours in circulating-air mode, you must install an activated carbon filter. The different options for operating the appliance in circulating-air mode can be found in the brochure. Alternatively, ask your dealer. The required accessories are available from specialist retailers, from customer service or from the Online Shop.

Operating the appliance

These instructions apply to several appliance variants. It is possible that individual features are described which do not apply to your appliance.

Note: Switch on the extractor hood when you start cooking and switch it off again several minutes after you have finished cooking. This is the most effective way of removing the kitchen fumes.

Control panel

Symbol	Explanation
⏻	Fan on/off
1-3	Fan settings
b	Intensive mode
💡	Light on/off

Setting the fan

Switching on

Touch the ⏻ symbol.

The fan starts at fan setting 2.

Selecting the fan setting

Touch symbol 1, 2 or 3 to set a different fan setting.

Switching off

Touch the ⏻ symbol.

Intensive setting

You can use the intensive setting if there is a large build-up of odours and fumes/vapours.

Switching on

Touch the b symbol.

Note: After approx. 6 minutes, the extractor hood automatically switches back to fan setting 3.

Switching off

If you want to end intensive mode before the preset time expires, touch the b symbol.

Lighting

The lighting can be switched on and off independently of the fan.

Touch the 💡 symbol.

Cleaning and maintenance

⚠ Warning – Risk of burns!
The appliance becomes hot during operation. Allow the appliance to cool down before cleaning.

⚠ Warning
Risk of electric shock!

- Penetrating moisture may result in an electric shock. Clean the appliance using a damp cloth only. Before cleaning, pull out the mains plug or switch off the circuit breaker in the fuse box.
- Do not use any high-pressure cleaners or steam cleaners, which can result in an electric shock.

⚠ Warning – Risk of injury!
Components inside the appliance may have sharp edges. Wear protective gloves.

Caution!
There is a risk of surface damage if you do not peel off the protective film.Remove the protective film from all parts of the appliance before using the appliance for the first time.

Cleaning agents

To ensure that the different surfaces are not damaged by using the wrong cleaning product, follow the instructions in the table. Do not use any of the following:

- Harsh or abrasive cleaning agents, e.g. scouring powder or liquid scouring cleaner,
- Cleaning products with a high alcohol content,
- Hard scouring pads or cleaning sponges,
- Pressure washers or steam cleaners,
- Cleaning products that dissolve limescale,
- Aggressive all-purpose cleaning products,
- Oven spray.

Note: Wash new sponge cloths thoroughly before use.

Note: Follow all instructions and warnings included with the cleaning products.

Area	Cleaning products
Stainless steel	Hot soapy water: Clean with a dish cloth and then dry with a soft cloth. Clean stainless steel surfaces in the direction of the grain only. Special stainless steel cleaning products are available from our after-sales service or from specialist retailers.Apply a very thin layer of the cleaning product with a soft cloth.
Painted surfaces	Hot soapy water: Clean using a damp dish cloth and then dry with a soft cloth. Do not use stainless steel cleaner.
Aluminium and plastic	Hot soapy water: Clean with a soft cloth.

Glass	Glass cleaner: Clean with a soft cloth. Do not use a glass scraper.
Controls	Hot soapy water: Clean using a damp dish cloth and then dry with a soft cloth. Risk of electric shock caused by penetrating moisture. Risk of damage to the electronics caused by penetrating moisture. Never clean controls with a wet cloth. Do not use stainless steel cleaner.

Removing metal grease filter

1. Open the lock and swing down the metal grease filter. When you do this, take hold of the metal grease filter from underneath with your other hand.
2. Take the metal grease filter out of the holder.

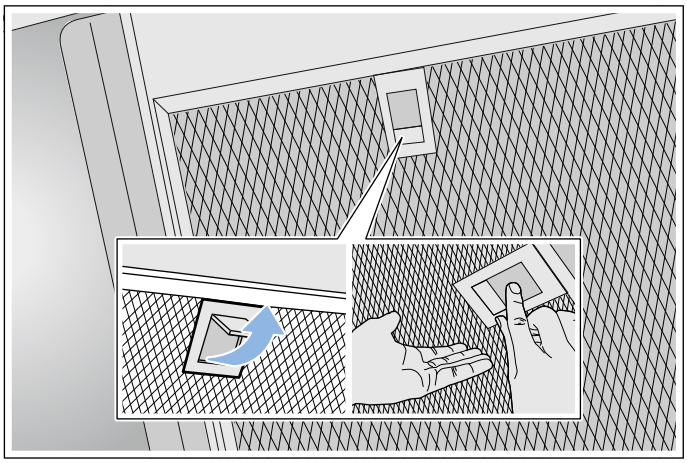

Notes
- Fat may accumulate in the bottom of the metal grease filter.
- Hold the metal grease filter level to prevent fat from dripping out.

Cleaning the metal mesh grease filters

These instructions apply to several appliance variants. It is possible that individual features are described which do not apply to your appliance.

⚠ Warning – Risk of fire!
Fatty deposits in the grease filter may catch fire. Regularly clean the grease filter. Never operate the appliance without a grease filter.

Notes
- Do not use aggressive, acidic or alkaline cleaning products.
- We recommend cleaning the grease filters every 2 months.
- When cleaning the metal grease filters, also clean the metal grease filter holder in the appliance using a damp cloth.
- The metal grease filters can be cleaned in the dishwasher or by hand.

By hand:

Note: You can use a special degreaser to remove stubborn dirt. This can be ordered from the online shop.

- Soak the metal grease filters in hot soapy water.
- Clean the filters with a brush and then rinse them thoroughly.
- Leave the metal grease filters to drain on an absorbent material.

In the dishwasher:

Note: Slight discolouration may occur if the metal grease filters are cleaned in the dishwasher. This discolouration has no effect on the performance of the metal grease filters.

- Use normal domestic dishwashing detergents.
- Do not clean heavily soiled metal grease filters together with cookware.
- Place the metal grease filters in the dishwasher, leaving plenty of space around them. Do not trap the metal grease filters.
- Select a temperature of no more than 70 °C.

Installing the metal mesh grease filter

⚠ Warning – Risk of injury!
Components inside the appliance may have sharp edges. Wear protective gloves.

Note: Clean all accessible parts of the housing.

1. Insert the metal grease filter and lock it in place. When you do this, take hold of the metal grease filter from underneath with your other hand.
   Note: Make sure that the metal grease filter is positioned correctly.
2. If the metal grease filter has not been inserted correctly, open the lock and reinsert the metal grease filter correctly.

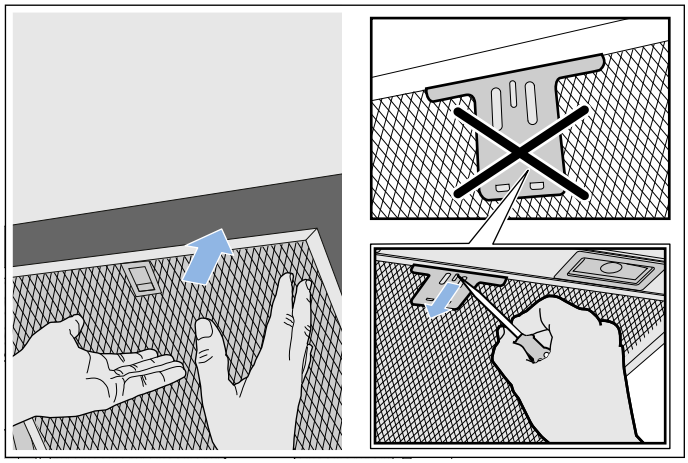

Trouble shooting

Malfunctions often have simple explanations. Please read the following notes before calling the after-sales service.

⚠ Warning – Risk of electric shock!
Incorrect repairs are dangerous. Repairs may only be carried out and damaged power cables replaced by one of our trained after-sales technicians. If the appliance is defective, unplug the appliance from the mains or switch off the circuit breaker in the fuse box. Contact the after-sales service.

Malfunction table

Problem	Possible cause	Solution
The appliance does not work	The plug is not plugged in.	Connect the appliance to the electricity supply
	Power cut	Check whether other kitchen appliances are working
	Faulty fuse	Check in the fuse box to make sure that the fuse for the appliance is OK
The lighting does not work.	The LED lights are defective.	Call the after-sales service.
The button illumination does not work.	The control unit is faulty.	Call the after-sales service.

LED lights

Defective LED lights may be replaced by the manufacturer, their customer service or a qualified technician (electrician) only.

⚠ Warning – Risk of injury!
The light emitted by LED lights is very dazzling, and can damage the eyes (risk group 1). Do not look directly into the switched on LED lights for longer than 100 seconds.

Customer service

When calling us, please give the product number (E no.) and the production number (FD no.) so that we can provide you with the correct advice. The rating plate with these numbers can be found inside the appliance (remove the metal mesh grease filter to gain access).

You can make a note of the numbers of your appliance and the telephone number of the after-sales service in the space below to save time should it be required.

E no.	**FD no.**
After-sales service☏	

Please be aware that a visit by an after-sales engineer will be charged if a problem turns out to be the result of operator error, even during the warranty period.

Please find the contact data of all countries in the enclosed customer service list.

To book an engineer visit and product advice
GB 0344 892 8999
Calls charged at local or mobile rate.
IE 01450 2655
0.03 € per minute at peak. Off peak 0.0088 € per minute.

Rely on the professionalism of the manufacturer. You can therefore be sure that the repair is carried out by trained service technicians who carry original spare parts for your appliances.

Accessories

(not included in the scope of delivery)

Note: These instructions apply to several appliance models. It may be the case that an optional accessory that is listed does not apply for your appliance.

Note: Observe the installation instructions in the accessory.

Accessory - narrow 260 mm	Order number
Starter set for air recirculation mode	LZ53650
Easy-change filter for starter set	LZ53251
CleanAir recirculation module	LZ57500
Easy-change filter for CleanAir recirculation module (cannot be regenerated)	LZ56200
Easy-change filter for CleanAir air-recirculation module (can be regenerated)	LZ00XXP00

Accessory - wide 345 mm	Order number
Starter set for air recirculation mode	LZ53850
Easy-change filter for starter set	LZ53451
CleanAir recirculation module	LZ57600
Easy-change filter for CleanAir recirculation module (cannot be regenerated)	LZ56200
Easy-change filter for CleanAir air-recirculation module (can be regenerated)	LZ00XXP00

INSTALLATION INSTRUCTIONS

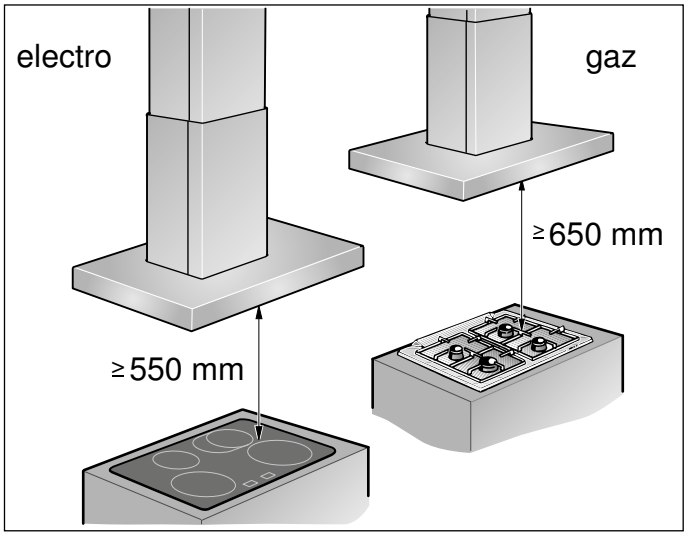

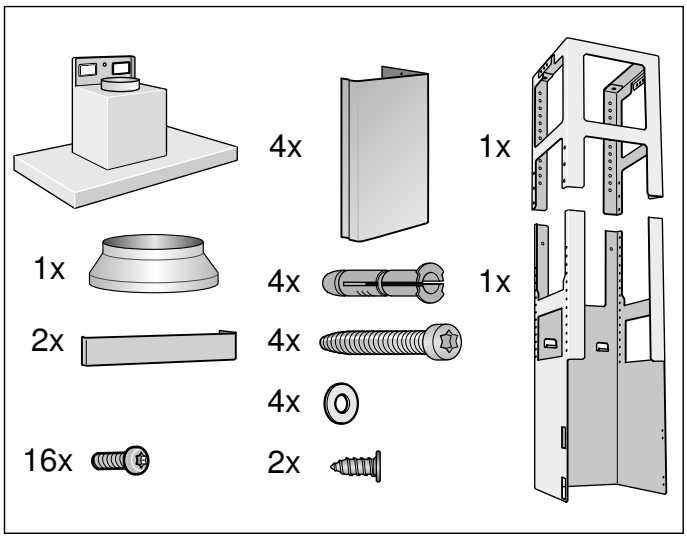

- This appliance is fitted to the kitchen ceiling or a sturdy suspended ceiling.
- Check the position of the screws using the enclosed template.
- Follow the enclosed installation instructions for additional special accessories (e.g. for circulating-air mode).
- The surfaces of the appliance are sensitive. Avoid damaging them during installation.

⚠ Important safety information

Read these instructions carefully. Only then will you be able to operate your appliance safely and correctly. Retain the instruction manual and installation instructions for future use or for subsequent owners.

Check the appliance for damage after unpacking it. Do not connect the appliance if it has been damaged in transport.

The appliance can only be used safely if it is correctly installed according to the safety instructions. The installer is responsible for ensuring that the appliance works perfectly at its installation location.

The surfaces of the appliance are easily damaged. Avoid damaging them during installation.

The width of the extractor hood must correspond at least with the width of the hob.

For the installation, observe the currently valid building regulations and the regulations of the local electricity and gas suppliers.

⚠ Warning – Risk of fire!

- Fatty deposits in the grease filter may catch fire. The specified safety clearances must be complied with in order to prevent a build-up of heat. Refer to the information provided for your cooker. If gas and electric hobs are being operated together, the largest specified clearance applies.
- Grease deposits in the grease filter may catch fire. Never work with naked flames close to the appliance (e.g. flambéing). Do not install the appliance near a heat-producing appliance for solid fuel (e.g. wood or coal) unless a closed, non-removable cover is available. There must be no flying sparks.

When conveying the exhaust air, official and legal regulations (e.g. state building regulations) must be followed.

⚠ Warning – Risk of death!
Risk of poisoning from flue gases that are drawn back in. The exhaust air must not be conveyed into a functioning smoke or exhaust gas flue or into a shaft which is used to ventilate installation rooms that contain heating appliances. If the exhaust air is to be conveyed into a non-functioning smoke or exhaust gas flue, you must obtain the consent of the heating engineer responsible.

⚠ Warning – Danger of death!
Risk of poisoning from flue gases that are drawn back in.
Always ensure adequate fresh air in the room if the appliance is being operated in exhaust air mode at the same time as room air-dependent heat-producing appliance is being operated.

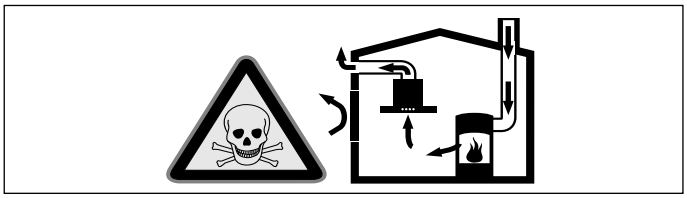

Room air-dependent heat-producing appliances (e.g. gas, oil, wood or coal-operated heaters, continuous flow heaters or water heaters) obtain combustion air from the room in which they are installed and discharge the exhaust gases into the open air through an exhaust gas system (e.g. a chimney).
In combination with an activated vapour extractor hood, room air is extracted from the kitchen and neighbouring rooms - a partial vacuum is produced if not enough fresh air is supplied. Toxic gases from the chimney or the extraction shaft are sucked back into the living space.

- Adequate incoming air must therefore always be ensured.
- An incoming/exhaust air wall box alone will not ensure compliance with the limit.

Safe operation is possible only when the partial vacuum in the place where the heat-producing appliance is installed does not exceed 4 Pa (0.04 mbar). This can be achieved when the air needed for combustion is able to enter through openings that cannot be sealed, for example in doors, windows, incoming/exhaust air wall boxes or by other technical means.

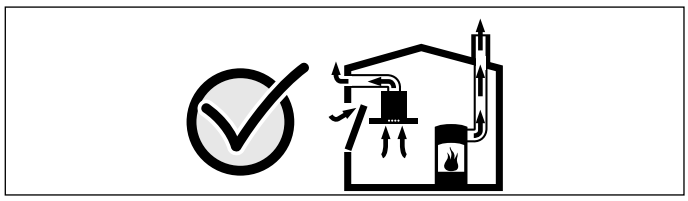

In any case, consult your responsible Master Chimney Sweep. He is able to assess the house's entire ventilation setup and will suggest the suitable ventilation measures to you.
Unrestricted operation is possible if the vapour extractor hood is operated exclusively in the circulating-air mode.

⚠ Warning – Danger of death!
Risk of poisoning from flue gases that are drawn back in. If installing a ventilation system in a room with a heat-producing appliance connected to a chimney/flue, the electricity supply to the hood must be equipped with a suitable safety switch.

⚠ Warning – Risk of injury!

- Components inside the appliance may have sharp edges. Wear protective gloves.
- The appliance may fall down if it has not been properly fastened in place. All fastening components must be fixed firmly and securely.
- The appliance is heavy. To move the appliance, 2 people are required. Use only suitable tools and equipment.
- Changes to the electrical or mechanical assembly are dangerous and may lead to malfunctions. Do not make any changes to the electrical or mechanical assembly.

⚠ Warning – Risk of electric shock!

- Components inside the appliance may have sharp edges. These may damage the connecting cable. Do not kink or pinch the connecting cable during installation.
- It must always be possible to disconnect the appliance from the electricity supply. The appliance must only be connected to a protective contact socket that has been correctly installed.
  The mains plug of the mains power cable must be easily accessible after installation of the appliance. If this is not possible, an all-pole isolating switch must be integrated into the permanent electrical installation according to the conditions of overvoltage category III and according to the installation regulations.
  The permanent electrical installation must only be wired by a professional electrician. We recommend installing a residual-current circuit breaker (RCCB) in the appliance's power supply circuit.

⚠ Warning – Risk of electric shock!
Incorrect repairs are dangerous. Repairs may only be carried out and damaged power cables replaced by one of our trained after-sales technicians. If the appliance is defective, unplug the appliance from the mains or switch off the circuit breaker in the fuse box. Contact the after-sales service.

⚠ Warning – Danger of suffocation!
Packaging material is dangerous to children. Never allow children to play with packaging material.

General information

Exhaust air mode

⚠ Warning – Risk of death!
Risk of poisoning from flue gases that are drawn back in. The exhaust air must not be conveyed into a functioning smoke or exhaust gas flue or into a shaft which is used to ventilate installation rooms that contain heating appliances. If the exhaust air is to be conveyed into a non-functioning smoke or exhaust gas flue, you must obtain the consent of the heating engineer responsible.

If the exhaust air is conveyed through the outer wall, a telescopic wall box should be used.

Exhaust duct

Note: The device manufacturer does not assume any warranty for complaints attributable to the pipe section.

- The device achieves its optimum performance by means of a short, straight exhaust air pipe and as large a pipe diameter as possible.
- As a result of long rough exhaust air pipes, many pipe bends or pipe diameters that are smaller than 150 mm, the optimum extraction performance is not achieved and fan noise is increased.
- The pipes or hoses for laying the exhaust air line must consist of non-combustible material.

Round pipes
An inner diameter of 150 mm, but at least 120 mm, is recommended.

Flat ducts
The inner cross-section must correspond to the diameter of the round pipes.

dia. 150 mm ca. 177 cm^2

dia. 120 mm ca. 113 cm^2

- Flat ducts should not have any sharp deflections.
- Use sealing strips for deviating pipe diameters.

Preparing the ceiling

- The ceiling must be flat, horizontal and have adequate load-bearing capacity.
- The depth of the bore holes must be the same length as the screws. The wall plugs must have a secure grip.
- The enclosed screws and wall plugs are suitable for solid brickwork. Suitable fasteners must be used for other structures (e.g. plasterboard, porous concrete, poroton bricks).
- The max. weight of the extractor hood is **50 kg**.

Electrical connection

⚠ Warning – Risk of electric shock!
Components inside the appliance may have sharp edges. These may damage the connecting cable. Do not kink or pinch the connecting cable during installation.

The required connection data can be found on the rating plate inside the appliance; to do this, remove the metal mesh grease filter.

Length of the cable: approx. 1.30 m

This appliance complies with the EC interference suppression regulations.

⚠ Warning – Risk of electric shock!
It must always be possible to disconnect the appliance from the electricity supply. The appliance must only be connected to a protective contact socket that has been correctly installed.
The mains plug of the mains power cable must be easily accessible after installation of the appliance. If this is not possible, an all-pole isolating switch must be integrated into the permanent electrical installation according to the conditions of overvoltage category III and according to the installation regulations.
The permanent electrical installation must only be wired by a professional electrician. We recommend installing a residual-current circuit breaker (RCCB) in the appliance's power supply circuit.

Installation

Fitting the upper support frame

1. Before fitting, determine the total height of the support frame and mark the screw holes.
   Note: The height of the support frame can be adjusted in 20 mm intervals.
2. On the ceiling, mark the centre point of the appliance.
3. Using the enclosed template, mark the positions for the screws on the ceiling.

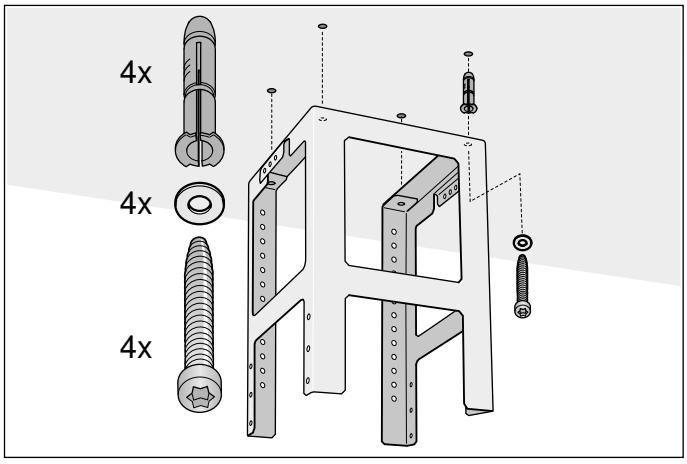

4. Drill four 8 mm diameter holes to a depth of 80 mm for the fasteners and press in the wall plugs flush with the ceiling.
5. Fasten the upper part of the support frame to the ceiling with 4 screws.
   Note: Ensure that the support frame is in the correct position. The middle bracket defines the preferred side and must be facing the hob control elements.

Fitting the lower support frame

Fasten the upper and lower part of the support frame at the specified total height using 10 screws.

Notes

- Ensure that the lower support frame is in the correct position. The open side must be facing the hob control elements.
- The support frame can be subsequently re-positioned by loosening the securing screws.

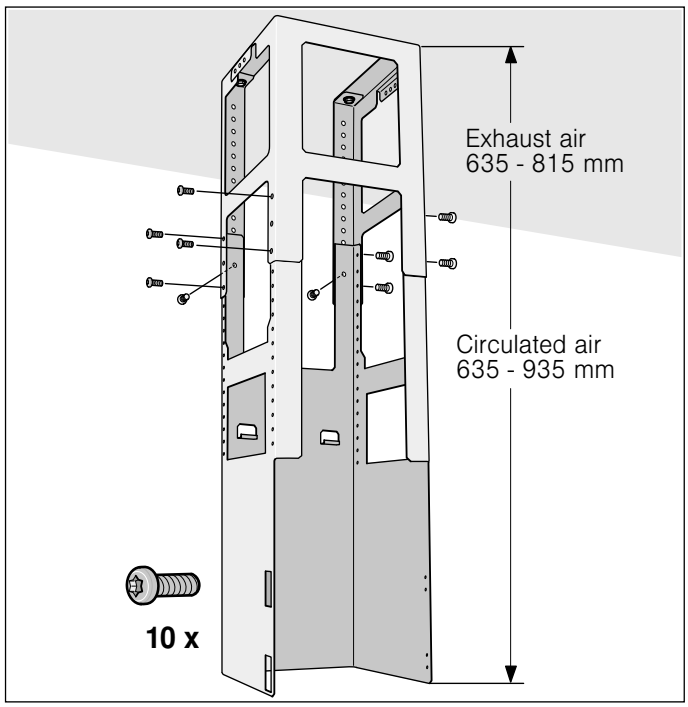

Fitting the appliance

1. Hook the appliance from below into the support frame.
   Note: Ensure that the mains cable is not trapped.
2. Fasten the appliance to the support frame using 2 securing screws.

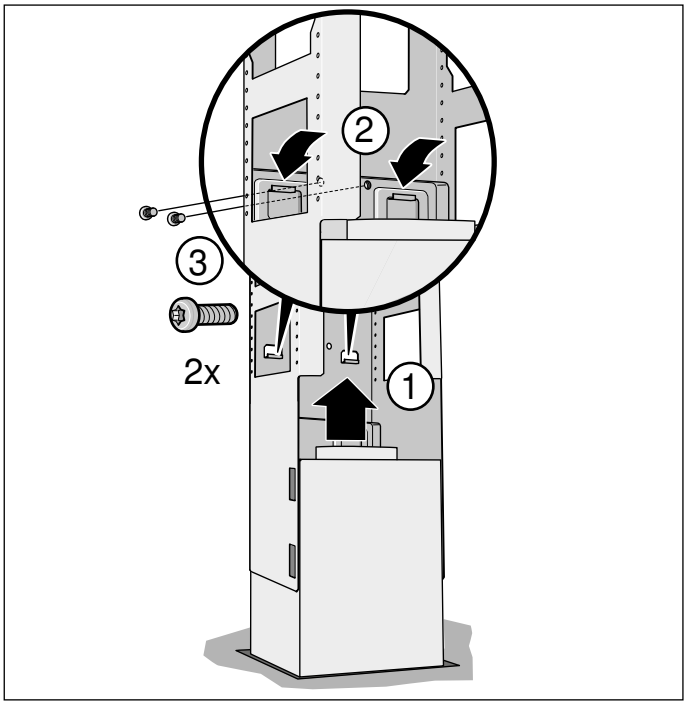

3. Hook in the retaining clip and screw tight.

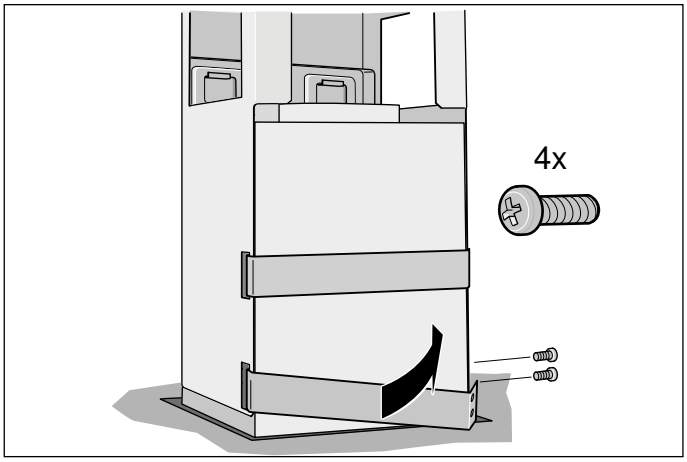

Connecting the pipes

Note: If using an aluminium pipe, smooth the connection area beforehand.

Exhaust-air pipe Ø 150 mm (recommended size)

Attach the exhaust-air pipe directly to the air-pipe connector and seal.

Exhaust-air pipe Ø 120 mm

1. Attach the reducing connector directly to the air-pipe connector.
2. Attach the exhaust air pipe to the reducing connector.
3. Seal both joints appropriately.

Attaching the flue duct

⚠ **Warning – Risk of injury!**
Components inside the appliance may have sharp edges. Wear protective gloves.

1. Separate the flue ducts.
   To do this, remove the adhesive tape.
2. Remove the protective foil from both sides.
3. Place both parts of the upper flue on the appliance and push together.
   Note: The slots of the upper flue must point downwards.

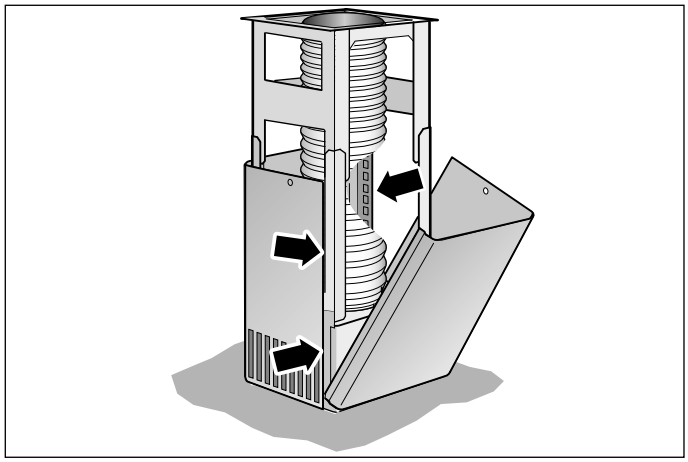

4. Push up the upper flue part and secure with 2 screws.

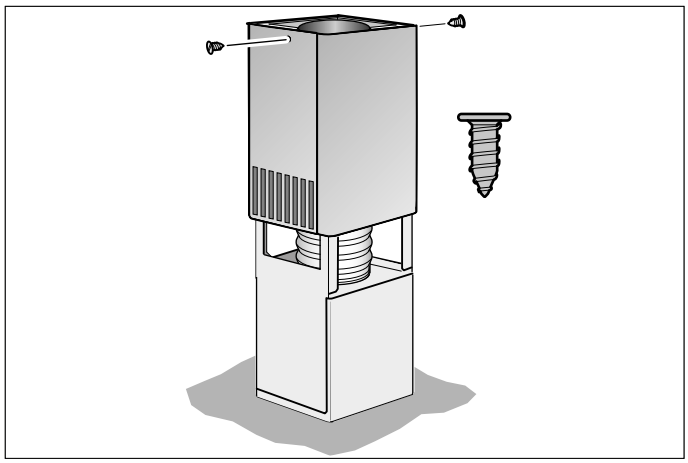

5. Insert both lower parts of the flue and push together.

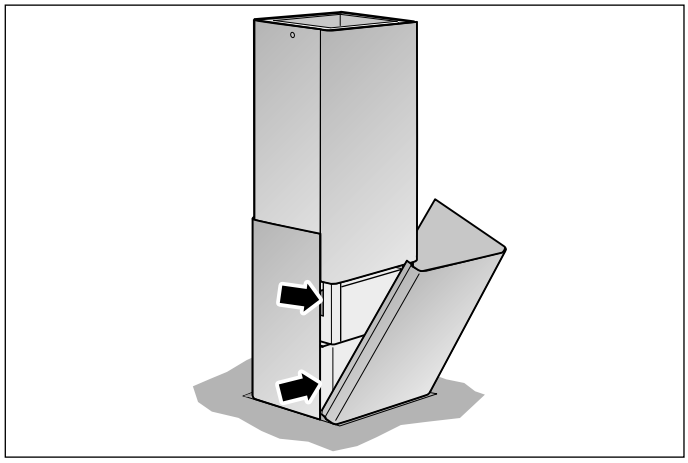

BSH Hausgeräte GmbH

Carl-Wery-Str. 34
81739 München

GERMANY

Manufactured by BSH Hausgeräte GmbH under Trademark License of Siemens AG

siemens-home.bsh-group.com

9001359408 (990731)