SIEMENS

Hob

EX9..KX...

siemens-home.bsh-group.com/welcome

en Instruction manual

Register your product online

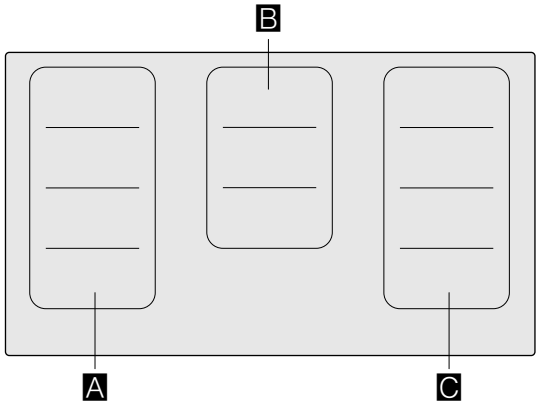

		9*	b*
A / C		2.200 W	3.700 W
		3.300 W	3.700 W
B		2.600 W	3.700 W

* IEC 60335-2-6

Ø = cm

Table of contents

Intended use . . . 5

Important safety information . . . 6

Causes of damage . . . 7
Overview . . . 7

Environmental protection . . . 8
Energy-saving advice . . . 8
Environmentally-friendly disposal . . . 8

Induction cooking . . . 8
Advantages of induction cooking . . . 8
Cookware . . . 8

Getting to know your appliance . . . 10
The control panel . . . 10
The hotplates . . . 11
Overview of the menus . . . 11
Residual heat indicator . . . 12

Operating the appliance . . . 12
First-time use . . . 12
Switching the hob on and off . . . 12
Setting the cooking zone . . . 12
Chef's recommendations . . . 13

Flex Zone . . . 16
Advice on using cookware . . . 16
As a single hotplate . . . 16
As two independent hotplates . . . 16

Move function . . . 17
Activation . . . 17
Deactivating . . . 18

Time-setting options . . . 18
Programming the cooking time . . . 18
The short-term timer . . . 19
Stopwatch function . . . 19

PowerBoost function . . . 19
Activation . . . 19
Deactivating . . . 20

ShortBoost function . . . 20
Recommendations for use . . . 20
Activation . . . 20
Deactivating . . . 21

Keep warm function . . . 21
Activation . . . 21
Deactivating . . . 21

Transferring settings . . . 22
Activation . . . 22

Cooking assist functions . . . 23
Cooking assistant function types . . . 23
Suitable cookware . . . 24
Sensors and special accessories . . . 24
Functions and heat settings . . . 24
Recommended dishes . . . 27
Dish assistant . . . 32

Wireless temperature sensor . . . 33
Preparing and maintaining the wireless temperature sensor . . . 33
Connecting the wireless temperature sensor to the control panel . . . 33
Cleaning . . . 34
Changing the battery . . . 34
Declaration of Conformity . . . 35

Childproof lock . . . 35
Activating and deactivating the childproof lock . . . 35
Childproof lock . . . 35

Wipe protection . . . 36
Activation . . . 36
Deactivating . . . 36

Automatic safety cut-out . . . 36

Basic settings . . . 37
To go to the basic settings: . . . 37
Basic settings menu . . . 37
Exiting the basic settings . . . 37
Saving or discarding changes . . . 37

Energy consumption indicator . . . 38

Cookware check . . . 38

Home Connect . . . 39
Setting up . . . 39
Home Connect settings . . . 41
Software update . . . 43
About data protection . . . 43
Declaration of Conformity . . . 44

Hood connection . . . 44
Setting up . . . 45
Resetting connection . . . 45
Control the hood via the hob . . . 45
Hood control settings . . . 46

Cleaning 47
Hob 47
Hob surround 47

Frequently Asked Questions (FAQ) 48

Trouble shooting 49
Information, warnings and fault messages 49
Tips 49
Demo mode 50

Customer service 51
E number and FD number 51

Test dishes 52

Additional information on products, accessories, replacement parts and services can be found at **www.siemens-home.bsh-group.com** and in the online shop **www.siemens-home.bsh-group.com/eshops**

Intended use

Read these instructions carefully. Please keep the instruction and installation manual, as well as the appliance certificate, in a safe place for later use or for subsequent owners.

Check the appliance after removing it from the packaging. If it has suffered any damage in transport, do not connect the appliance, contact the Technical Assistance Service and provide written notification of the damage caused, otherwise you will lose your right to any type of compensation.

This appliance must be installed according to the installation instructions included.

This appliance is intended for private domestic use and the household environment only. The appliance must only be used for the preparation of food and beverages. The cooking process must be supervised. A short cooking process must be supervised without interruption. Only use the appliance in enclosed spaces.

This appliance is intended for use up to a maximum height of 4000 metres above sea level.

Do not use covers. These can cause accidents, for example due to overheating, catching fire or materials shattering.

Only use safety devices or child protection grilles approved by ourselves. Unsuitable safety devices or child protection grilles may result in accidents.

This appliance is not intended for operation with an external clock timer or a remote control.

This appliance may be used by children over the age of 8 years old and by persons with reduced physical, sensory or mental capabilities or by persons with a lack of experience or knowledge if they are supervised or are instructed by a person responsible for their safety how to use the appliance safely and have understood the associated hazards.

Children must not play with, on, or around the appliance. Children must not clean the appliance or carry out general maintenance unless they are at least 15 years old and are being supervised.

Keep children below the age of 8 years old at a safe distance from the appliance and power cable.

Always monitor the cooking process. Short cooking processes must be monitored continuously.

We advise that you exercise caution using or standing near an induction hob while it is in operation, if you wear a pacemaker or a similar medical device. Consult your doctor or the device manufacturer concenring its conformity or any possible incompatibilities,

If you wear an active implantable medical device (e.g. a pacemaker or defibrillator), check with your doctor that it complies with Council Directive 90/385/EEC of 20th June 1990, DIN EN 45502-2-1 and DIN EN 45502-2-2, and that it has been chosen, implanted and programmed in accordance with VDE-AR-E 2750-10. If these conditions are satisfied, and if, in addition, non-metal cooking utensils and cookware with non-metal handles are used, it is safe to use this induction hob as intended.

Important safety information

⚠ Warning – Risk of fire!

- Hot oil and fat can ignite very quickly. Never leave hot fat or oil unattended. Never use water to put out burning oil or fat. Switch off the hotplate. Extinguish flames carefully using a lid, fire blanket or something similar.
- The hotplates become very hot. Never place combustible items on the hob. Never place objects on the hob.
- The appliance gets hot. Do not keep combustible objects or aerosol cans in drawers directly underneath the hob.
- The hob switches off automatically and can no longer be operated. It may switch on unintentionally at a later point. Switch off the circuit breaker in the fuse box. Contact the after-sales service.
- Do not use hob covers here.They can cause accidents, for example due to overheating, catching fire or materials shattering.

⚠ Warning – Risk of burns!

- The hotplates and surrounding area (particularly the hob surround, if fitted) become very hot. Never touch the hot surfaces. Keep children at a safe distance.
- The hotplate heats up but the display does not work. Switch off the circuit breaker in the fuse box. Contact the after-sales service.
- Metal objects on the hob quickly become very hot. Never place metal objects (such as knives, forks, spoons and lids) on the hob.
- After each use, always turn off the hob at the main switch. Do not wait until the hob turns off automatically after the pan is removed.

⚠ Warning – Risk of electric shock!

- Incorrect repairs are dangerous. Repairs may only be carried out and damaged power cables replaced by one of our trained after-sales technicians. If the appliance is defective, unplug the appliance from the mains or switch off the circuit breaker in the fuse box. Contact the after-sales service.
- Do not use any high-pressure cleaners or steam cleaners, which can result in an electric shock.
- A defective appliance may cause electric shock. Never switch on a defective appliance. Unplug the appliance from the mains or switch off the circuit breaker in the fuse box. Contact the after-sales service.
- Cracks or fractures in the glass ceramic may cause electric shocks. Switch off the circuit breaker in the fuse box. Contact the after-sales service.

⚠ Warning – Hazard due to magnetism!

The wireless temperature sensor is magnetic. The magnetic elements in it may damage electronic implants, e.g. pacemakers or insulin pumps. People fitted with electronic implants should therefore not carry the temperature sensor in their pockets and always keep it at least 10 cm away from their pacemaker or similar medical device.

⚠ Warning – Malfunction risk!

The hob is equipped with a fan in the lower section. If there is a drawer under the hob it should not be used to store small objects or paper, since they could damage the fan or interfere with the cooling if they are sucked into it.
There should be a minimum of 2 cm between the contents of the drawer and fan intake.

⚠ Warning – Risk of injury!

- The battery in the wireless temperature sensor may become damaged or explode if it gets too hot. Remove the sensor from the hob after cooking and do not store it near sources of heat.
- The temperature sensor may be very hot when removing it from the saucepan. Wear oven gloves or use a tea towel to remove it.
- When cooking in a bain marie, the hob and cooking container could shatter due to overheating. The cooking container in the bain marie must not directly touch the bottom of the water-filled pot. Only use heat-resistant cookware.
- Saucepans may suddenly jump due to liquid between the pan base and the hotplate. Always keep the hotplate and saucepan bases dry.

Causes of damage

Caution!

- Rough pan bases may scratch the hob.
- Avoid leaving empty pots and pans on the hotplate. Doing so may cause damage.
- Do not place hot pans on the control panel, the indicator area, or the hob frame. Doing so may cause damage.
- Hard or pointed objects dropped on the hob may damage it.
- Aluminium foil and plastic containers will melt if placed on the hotplate while it is hot. The use of laminated sheeting is not recommended on the hob.

Overview

You will find the most frequently caused damage in the following table:

Damage	Cause	Measure
Stains	Boiled over food.	Remove boiled over food immediately with a glass scraper.
	Unsuitable cleaning agent.	Only use cleaning agents that are suitable for this type of hob.
Scratches	Salt, sugar and sand.	Do not use the hob as a work surface or storage space.
	Cookware with rough bases scratch the hob.	Check the cookware.
Discolouration	Unsuitable cleaning agent.	Only use cleaning agents that are suitable for this type of hob.
	Pan abrasion.	Lift pots and pans when moving them.
Chips	Sugar, food with a high sugar content.	Remove boiled over food immediately with a glass scraper.

Environmental protection

In this section, you can find information about saving energy and disposing of the appliance.

Energy-saving advice

- Always use the correct lid for each pan. Cooking without a lid uses a lot more energy. Use a glass lid to provide visibility and avoid having to lift the lid.
- Use pans with flat bases. Bases that are not flat use a lot more energy.
- The diameter of the pan base must match the size of the hotplate. Please note: pan manufacturers usually provide the diameter for the top of the pan, which is usually larger than the diameter of the pan base.
- Use a small pan for small amounts of food. A large pan which is not full uses a lot of energy.
- Use little water when cooking. This saves energy and preserves all the vitamins and minerals in vegetables.
- Select the lowest power level to maintain cooking. If the power level is too high, energy is wasted.

Environmentally-friendly disposal

Dispose of packaging in an environmentally-friendly manner.

This appliance is labelled in accordance with European Directive 2012/19/EU concerning used electrical and electronic appliances (waste electrical and electronic equipment - WEEE). The guideline determines the framework for the return and recycling of used appliances as applicable throughout the EU.

The wireless temperature sensor is battery-powered. Dispose of used batteries in an environmentally responsible manner.

Induction cooking

Advantages of induction cooking

Induction cooking is very different from traditional cooking methods, as heat builds up directly in the item of cookware. This offers numerous advantages:

- Saves time when boiling and frying.
- Saves energy.
- Easier to care for and clean. Spilled food does not burn on as quickly.
- Heat control and safety – the hob increases or decreases the heat supply as soon as the user changes the setting. The induction hotplate stops the heat supply as soon as the cookware is removed from the hotplate, without having to switch it off first.

Cookware

Only use ferromagnetic cookware for induction cooking, such as:

- Cookware made from enamelled steel
- Cookware made from cast iron
- Special induction-compatible cookware made from stainless steel.

To check whether your cookware is suitable for induction cooking, refer to the section on → *"Cookware check"*.

To achieve a good cooking result, the ferromagnetic area on the base of the pan should match the size of the hotplate. If a hotplate does not detect an item of cookware, try placing it on another hotplate with a smaller diameter.

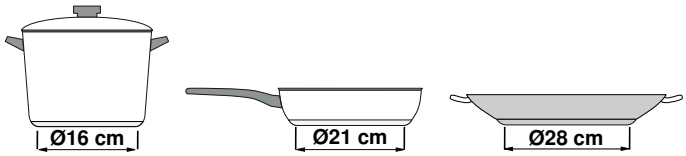

If the only hotplate being used is the flexible cooking zone, larger cookware that is particularly suited to this zone can be used. You can find information on positioning cookware in the section on → *"Flex Zone"*.

Some induction cookware does not have a fully ferromagnetic base:

- If the base of the cookware is only partially ferromagnetic, only the area that is ferromagnetic will heat up. This may mean that heat will not be distributed evenly. The non-ferromagnetic area may not heat up to a sufficient temperature for cooking.

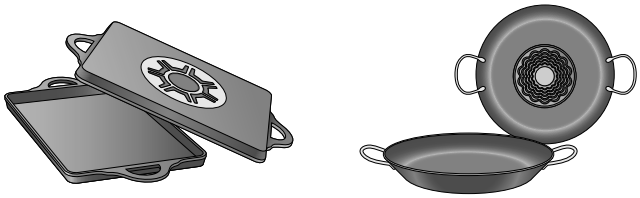

- The ferromagnetic area will also be reduced if the material from which the base of the cookware is made contains aluminium, for example. This may mean that the cookware will not become sufficiently hot or even that it will not be detected.

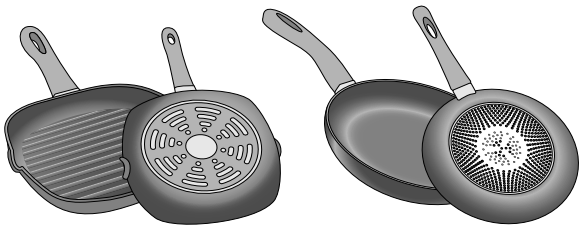

Unsuitable pans

Never use diffuser hobs or pans made from:

- common thin steel
- glass
- earthenware
- copper
- aluminium

Properties of the base of the cookware

The material(s) from which the base of the cookware is made can affect the cooking result. Using pots and pans made from materials that distribute heat evenly through them, such as stainless-steel pans with a three-layer base, saves time and energy.

Use cookware with a flat base; if the base of the cookware is uneven, this may impair the heat supply.

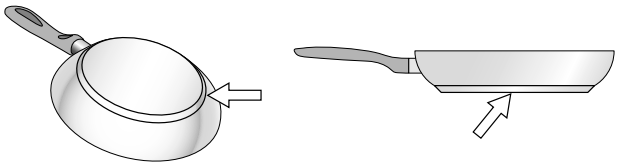

Absence of pan or unsuitable size

If no pan is placed on the selected hotplate, or if it is made of unsuitable material or is not the correct size, the power level displayed on the hotplate indicator will flash. Place a suitable pan on the hotplate to stop the flashing. If this takes more than 90 seconds, the hotplate will switch off automatically.

Empty pans or those with a thin base

Do not heat empty pans, nor use pans with a thin base. The hob is equipped with an internal safety system. However, an empty pan may heat up so quickly that the "automatic switch off" function may not have time to react and the pan may reach very high temperatures. The base of the pan could melt and damage the glass on the hob. In this case, do not touch the pan and switch the hotplate off. If it fails to work after it has cooled down, please contact the Technical Assistance Service.

Pan detection

Each hotplate has a lower limit for pan detection. This depends on the diameter of the ferromagnetic area of the cookware and the material from which its base is made. For this reason, you should always use the hotplate that best matches the diameter of the base of the pan.

Getting to know your appliance

You can find information on the dimensions and power of the hotplates in→ *Page 2*

The control panel

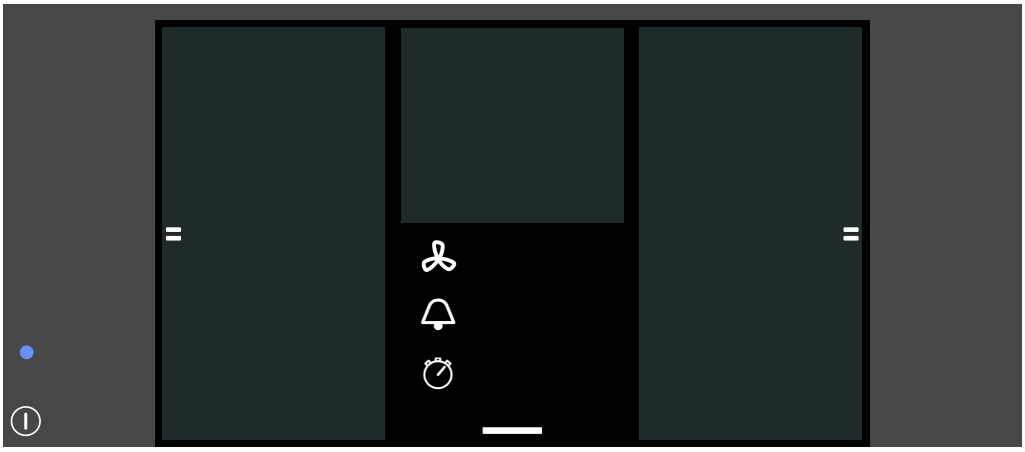

Touch controls		
	Main switch	
	FlexZone	
	Short-term timer	
	Stopwatch function	
	Extractor hood control	
	Wi-Fi	
	Docking menu	
		Basic settings
		Lock the control panel for cleaning
		Childproof lock
		Info menu
	Set the cooking time	
	Cooking modes menu	
		Heat setting
		Cooking functions
		Frying sensor
		Move function
		Dish assistant
0... boost	Settings area	
	0-9	Heat settings
		Keep-warm function
		PowerBoost function
		ShortBoost function

Touch controls

The sensors are touch buttons. To select a function, touch the symbol that represents this function. The available functions appear on the display.

Note: Always keep the control panel clean and dry. Moisture can prevent it from working properly.

The hotplates

Hotplates		
	Simple hotplate	Use cookware that is a suitable size
	Middle simple hotplate	Use cookware that is a suitable size
	Flexible cooking zone	See section ⟶ *"Flex Zone"*
Only use cookware that is suitable for induction cooking; see section ⟶ *"Induction cooking"*		

Overview of the menus

The intuitive menu structure helps you to find your way around the control panel of your hob. You can find out more about the most important menus in this section.

Main screen

An overview of the cooking zones that the hob has will be shown on the main screen. Cooking modes, heat settings and time-setting options will be shown on the displays for the active cooking zones.

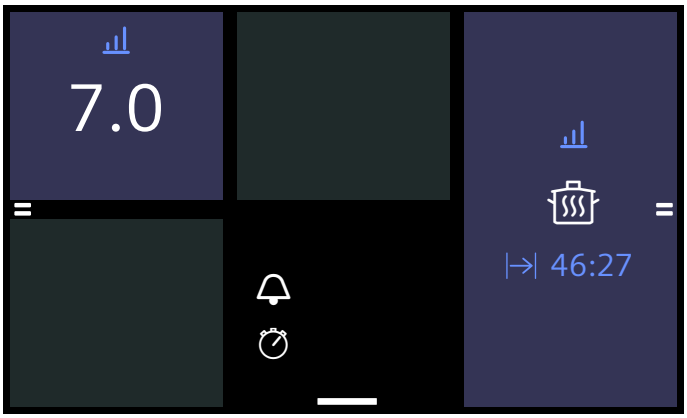

Settings area

Go to the settings area for a particular cooking zone if you want to configure the heat settings, cooking times or the various cooking modes for this cooking zone.

To bring up the settings area, touch the cooking zone you require.

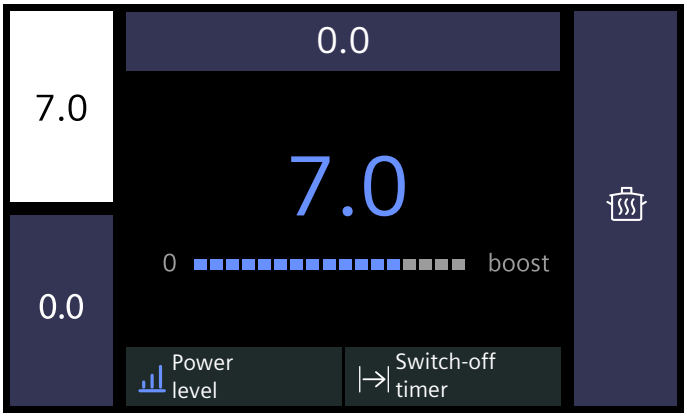

Docking menu

You can access certain functions and further menus via the Docking menu.

To open the Docking menu, touch the ⎽ symbol at the bottom of the main screen in the middle and swipe up.

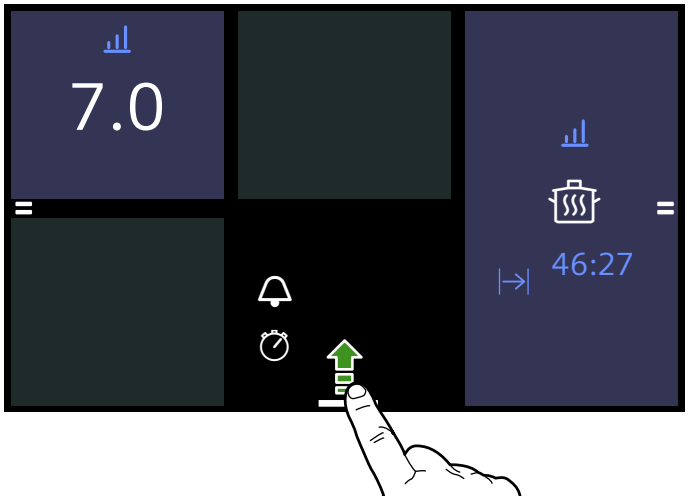

The Docking menu will display the following options:

- Lock the control panel for cleaning
- Childproof lock
- Info menu
- Basic settings

To close the Docking menu, touch the ⎽ symbol again and swipe down.

Info menu

You can access information about the appliance using the Info menu.

To navigate to the Info menu, open the Docking menu and touch the symbol. The available options will be displayed.

To exit the Info menu, touch the ← symbol.

You can also access information on the functions you are currently using. To do this, touch the symbol for the function you require and hold it for a few seconds. On the display, an info window will appear that describes the current function.

Cooking modes menu

The hob has a number of different cooking modes.

Cooking mode	Function
Heat settings	Allows you to select the heat setting for the cooking zone.
Cooking functions	The wireless cooking sensor automatically detects the temperature as cooking progresses. **Note:** This function will be ready to use once the wireless cooking sensor is connected to the control panel.
Frying sensor	The hob automatically detects the temperature as frying progresses.
powerMove	The temperature is adjusted by changing the position of the cookware on the cooking zones.
Dish assistant	A preset list of dishes for braising and boiling.

To navigate to the Cooking modes menu, select the cooking zone and touch the active cooking mode.

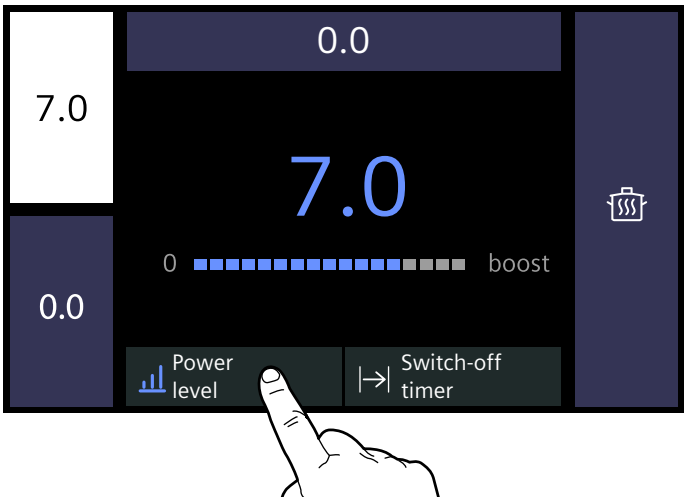

Residual heat indicator

The hob has a residual heat indicator for each hotplate. This indicates that a hotplate is still hot. Do not touch the hotplate while the residual heat indicator is still lit or immediately after it goes out.

When the hotplate is switched off, the residual heat indicator will light up. Even after the hob has been switched off, the residual heat indicator will remain lit as long as the hotplate is still warm.

Operating the appliance

This chapter explains how to set a hotplate. The table shows heat settings and cooking times for various meals.

First-time use

When you switch on the appliance for the first time, the menu for implementing the initial settings appears in the display panel.

The main screen is then displayed.

Note: You can change the language and any other setting at any time. You can find further information on selecting the language in section → *"Basic settings"*.

Switching the hob on and off

Switch the hob on and off using the main switch.

To switch on: Touch the ⏻ sensor. A signal sounds and the touch display lights up. After a short switch-on time, the hob will be ready for operation.

To switch off: Touch the ⏻ symbol until the indicator beside the main switch goes out. The residual heat indicator remains lit until the cooking zones have cooled down sufficiently.

Notes

- The hob automatically switches off if all cooking zones have been switched off for more than 20 seconds.
- The selected settings are stored for 10 minutes after the hob has been switched off. If the hob is switched back on within this time, the previous settings are retained. Section → *"Basic settings"* contains information about changing the time in which the selected settings are saved.

Setting the cooking zone

Set the required power setting from 1 to 9.

Power setting 1 = lowest setting.

Power setting 9 = highest setting.

Each power setting has an intermediate level.

Selecting a hotplate and heat setting

The hob must be switched on.

1. Touch the symbol for the hotplate you require to select the hotplate. The settings area for the hotplate you have selected will appear on the display panel.

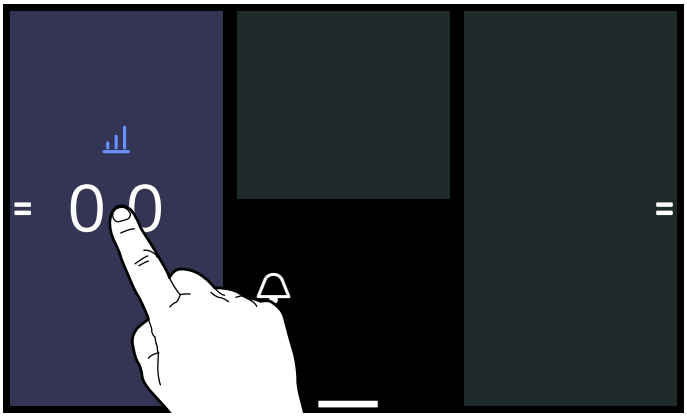

2. Swipe your finger over the settings area and touch the heat setting you require.

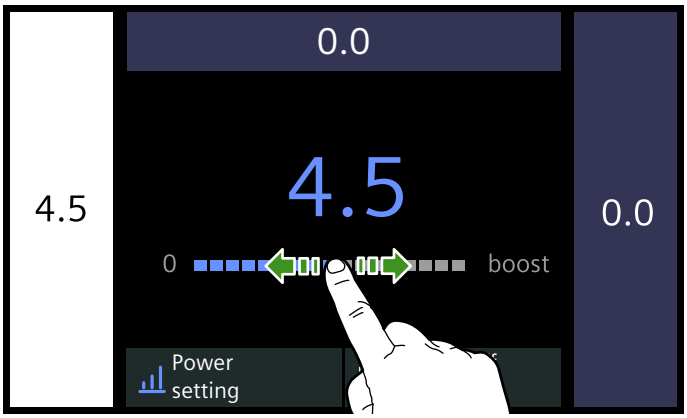

The heat setting has now been set.

To return to the main screen, touch the symbol for the active hotplate again.

Notes

- The flexible cooking zone is activated as a single cooking zone. To use them as two independent cooking zones, see the section entitled ⟶ *"Flex Zone"*
- If there is no cookware on the active cooking zone, the selected heat setting will flash. After a certain period of time, the cooking zone will switch itself off.
- If you have placed an item of cookware on the cooking zone before switching on the hob, it will be detected within 20 seconds of the main switch being touched. The cooking zone is selected automatically.Once the cookware has been detected, the heat setting must be selected within 20 seconds, otherwise the cooking zone will switch itself back off.

To change the heat setting:

Select the hotplate and set the new heat setting in the settings area.

Switching off the cooking zone

Select the cooking zone and set the heat setting to 0 in the settings area. The cooking zone will switch itself off and the residual heat indicator will light up.

If you touch and hold the cooking zone indicator on the main display for a few seconds, the heat setting will automatically be set to 0.0. Information on how to deactivate this setting can be found in the section entitled ⟶ *"Basic settings"*

Chef's recommendations

Recommendations

- When heating up puree, cream soups and thick sauces, stir occasionally.
- Set heat setting 8 to 9 for preheating.
- When cooking with the lid on, turn the heat setting down as soon as steam escapes between the lid and the cookware. Steam does not need to escape for a good cooking result.
- After cooking, keep the lid on the cookware until you serve the food.
- To cook with the pressure cooker, observe the manufacturer's instructions.
- Do not cook food for too long, otherwise the nutrients will be lost. The kitchen clock can be used to set the optimum cooking time.
- For a more healthy cooking result, smoking oil should be avoided.
- To brown food, fry small portions in succession.
- Cookware may reach high temperatures while the food is cooking. We recommend that you use oven gloves.
- You can find recommendations for energy-efficient cooking in section ⟶ *"Environmental protection"*

Cooking table

The table shows which heat setting is suitable for each type of food. The cooking time may vary depending on the type, weight, thickness and quality of the food.

	Heat setting	Cooking time (mins)
Melting		
Chocolate coating	1 - 1.5	-
Butter, honey, gelatine	1 - 2	-
Heating and keeping warm		
Stew, e.g. lentil stew	1.5 - 2	-
Milk*	1.5 - 2.5	-
Heating sausages in water*	3 - 4	-
Defrosting and heating		
Spinach, frozen	3 - 4	15 - 25
Goulash, frozen	3 - 4	35 - 55
Poaching, simmering		
Potato dumplings*	4.5 - 5.5	20 - 30
Fish*	4 - 5	10 - 15
White sauces, e.g. Béchamel sauce	1 - 2	3 - 6
Whisked sauces, e.g. sauce béarnaise, hollandaise	3 - 4	8 - 12
Boiling, steaming, braising		
Rice (with double the volume of water)	2.5 - 3.5	15 - 30
Rice pudding***	2 - 3	30 - 40
Unpeeled boiled potatoes	4.5 - 5.5	25 - 35
Boiled potatoes	4.5 - 5.5	15 - 30
Pasta, noodles*	6 - 7	6 - 10
Stew	3.5 - 4.5	120 - 180
Soups	3.5 - 4.5	15 - 60
Vegetables	2.5 - 3.5	10 - 20
Vegetables, frozen	3.5 - 4.5	7 - 20
Cooking in a pressure cooker	4.5 - 5.5	-
Braising		
Roulades	4 - 5	50 - 65
Pot roast	4 - 5	60 - 100
Goulash***	3 - 4	50 - 60

* Without lid
** Turn several times
*** Preheat to heat setting 8 - 8.5

	Heat setting	Cooking time (mins)
Roasting/frying with little oil*		
Escalope, plain or breaded	6 - 7	6 - 10
Escalope, frozen	6 - 7	8 - 12
Chop, plain or breaded**	6 - 7	8 - 12
Steak (3 cm thick)	7 - 8	8 - 12
Poultry breast (2 cm thick)**	5 - 6	10 - 20
Poultry breast, frozen**	5 - 6	10 - 30
Rissoles (3 cm thick)**	4.5 - 5.5	20 - 30
Hamburgers (2 cm thick)**	6 - 7	10 - 20
Fish and fish fillet, plain	5 - 6	8 - 20
Fish and fish fillet, breaded	6 - 7	8 - 20
Fish, breaded and frozen, e.g. fish fingers	6 - 7	8 - 15
Scampi, prawns	7 - 8	4 - 10
Sautéeing fresh vegetables and mushrooms	7 - 8	10 - 20
Stir-fry, vegetables, meat cut in Asian-style strips	7 - 8	15 - 20
Stir fry, frozen	6 - 7	6 - 10
Pancakes (baked in succession)	6.5 - 7.5	-
Omelette (cooked in succession)	3.5 - 4.5	3 - 6
Fried eggs	5 - 6	3 - 6
Deep-fat frying* (150-200 g per portion in 1-2 l oil, deep-fat fried in portions)		
Frozen products, e.g. chips, chicken nuggets	8 - 9	-
Croquettes, frozen	7 - 8	-
Meat, e.g. chicken portions	6 - 7	-
Fish, breaded or in beer batter	6 - 7	-
Vegetables, mushrooms, breaded or battered, tempura	6 - 7	-
Small baked items, e.g. doughnuts, fruit in batter	4 - 5	-

* Without lid
** Turn several times
*** Preheat to heat setting 8 - 8.5

Flex Zone

You can use each flex zone as a single hotplate or as two independent hotplates, as required.

It consists of four inductors that work independently of each other. If using the flexible cooking zone, only the area that is covered by cookware is activated.

Advice on using cookware

To ensure that the cookware is detected and heat is distributed evenly, correctly centre the cookware:

As a single hotplate

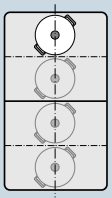

Diameter smaller than or equal to 13 cm
Place the cookware on one of the four positions that can be seen in the illustration.

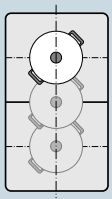

Diameter greater than 13 cm
Place the cookware on one of the three positions that can be seen in the illustration.

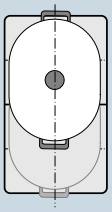

If the cookware takes up more than one hotplate, place it starting on the upper or lower edge of the flexible cooking zone.

As two independent hotplates

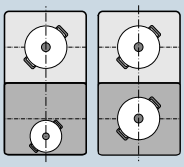

The front and rear hotplates each have two inductors and can be used independently of each other. Select the required heat setting for each of the hotplates. Use only one item of cookware on each hotplate.

Middle hotplate

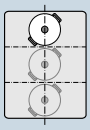

Diameter smaller than or equal to 13 cm
Place the cookware on one of the three positions that can be seen in the illustration.

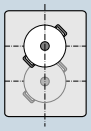

Diameter greater than 13 cm
Place the cookware on one of the two positions that can be seen in the illustration.

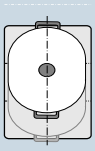

If the cookware occupies more than two inductors, place it starting from the upper or the lower edge of the hotplate.

Recommendations

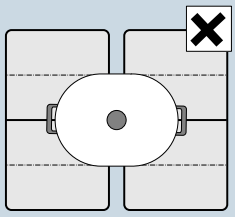

If the hob has more than one flexible cooking zone, place the cookware on top so that it covers only one of the flexible cooking zones.

Otherwise, the hotplates will not be activated as intended and the cooking result will not be satisfactory.

As a single hotplate

The flexible cooking zone is activated as a single hotplate.

Activation

1. Select the flexible cooking zone.
2. Select the heat setting you require from the settings area. The heat setting and the indicator showing the active cooking mode will be lit in the centre of the flexible cooking zone.

The Flex cooking zone has now been activated.

To change the heat setting:

Select the flexible cooking zone and adjust the heat setting to the setting you require in the settings area.

Adding new cookware

Place the new item of cookware onto the flexible cooking zone and follow the instructions on the display panel.

Note: If the cookware is moved to the hotplate being used or lifted up, the hotplate begins an automatic search and the heat setting selected previously is retained.

Deactivating

Select the flexible cooking zone and set the heat setting to 0. The flexible cooking zone will switch itself off and the residual heat indicator will appear.

As two independent hotplates

Use the flexible cooking zone as two independent hotplates.

Unlinking the two hotplates

Touch the 〓 symbol. The heat setting and the indicator showing the active cooking mode will be lit at the hotplate on which the cookware is placed.

The flexible cooking zone functions as two independent hotplates.

Linking the two hotplates

Touch the 〓 symbol. The heat setting and the indicator showing the active cooking mode will be lit in the centre of the flexible cooking zone.

The flexible cooking zone functions as a single hotplate.

Notes

- If the hob switches itself off and then on again, the flexible cooking zone is used as a single hotplate again.
- To change the configuration settings for the flexible cooking zone, refer to section ⟶ *"Basic settings"*.

Move function

This function activates the entire flexible cooking zone, which is divided into three cooking areas and which has preset heat settings.

Only use one item of cookware. The size of the cooking area depends on the cookware used and whether it is positioned correctly.

Cooking areas

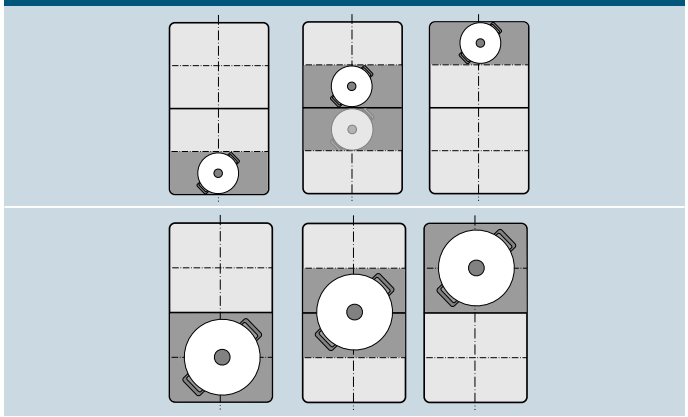

This means that an item of cookware can be moved during the cooking process to another cooking area with another heat setting:

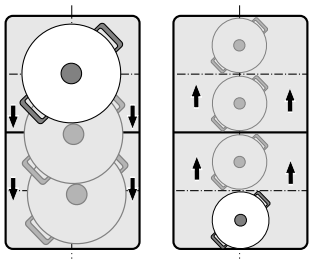

Preset power settings:

Front section = power setting 9.0

Middle section = power setting 5.0

Rear section = power setting

The preset power settings can be changed independently of one another. You can find out how to change these in section ⟶ *"Basic settings"*.

Notes

- If more than one item of cookware is detected on the flexible cooking zone, the function is deactivated.
- If the cookware is moved within the flexible cooking zone or lifted up, the hob automatically starts searching and the heat setting of the area in which the vessel was detected is set.
- You can find information on the size and positioning of the cookware in the section on ⟶ *"Flex Zone"*

Activation

1. Select a hotplate from the flexible cooking zone.
2. Touch the active cooking mode.
3. Select the powerMove option.

This function has now been activated.

To change the heat setting:

The heat settings for the individual cooking areas can be changed as you cook. Touch the symbol for the cooking area you require and adjust the heat setting in the settings area.

Note: If the function is deactivated, the heat settings for the three cooking areas are reset to the preset values.

Deactivating

Select the cooking area and touch the Switch off button in the settings area. The hotplate will switch itself off and the residual heat indicator will appear.

This function has now been deactivated.

Time-setting options

Your hob has three timer functions:

- Programming the cooking time
- Kitchen timer
- Stopwatch function

Programming the cooking time

The hotplate automatically switches off after the time that is set has elapsed.

Setting procedure:

1. Select the cooking zone and required power setting.
2. Select |→| Switch-off timer in the cooking zone settings area.
3. Set the time you require.
   To set the number of hours, touch 00 h and select the time in the settings area.
   To set the number of minutes, touch 00 m and select the time in the settings area.
4. Touch the ▷ symbol.

The time will now start to elapse.

After a few seconds, the time will appear on the cooking zone display.

Notes

- If the FlexZone is selected as the only cooking zone, the set cooking time for the entire cooking zone is the same.
- If the Move function is selected, the set time for the three hotplates is the same.

Frying sensor

If a cooking time has been programmed for a hotplate and the frying sensor has been activated, the cooking time will not begin to count down until the selected temperature setting has been reached.

Cooking functions

If a cooking time has been programmed for a hotplate and one of the cooking functions has been activated, the set cooking time will not start to count down until the temperature for the selected area has been reached.

Changing or deleting the time

To navigate to the cooking time, first touch the cooking zone display and then the |→| Switch-off timer symbol.

To change the cooking time, select a new cooking time and then touch ▷ Start.

To cancel the cooking time, touch ✕ Reset.

To return to the main screen, touch the cooking zone display.

When the time has elapsed

The cooking zone will switch itself off. An audible signal will sound and the heat setting will be set to 0.0.

Touch the cooking zone display to make the time disappear and stop the audible signal.

The short-term timer

The short-term timer operates independently of the cooking zones and other settings. An audible signal will sound once the time has elapsed. This function does not automatically switch off a cooking zone.

Setting procedure

1. Touch the 🔔 sensor.
2. Set the time you require.
   To set the number of hours, touch 00 h and select the time in the settings area.
   To set the number of minutes, touch 00 m and select the time in the settings area.
3. Touch the ▷ symbol.

The time will now start to elapse.

After a few seconds, the time will appear on the main screen.

Changing or deleting the time

To activate the short-term timer, touch the 🔔 sensor

To change the cooking time, select a new cooking time and then touch ▷ Start.

To cancel the cooking time, touch ✕ Reset.

To return to the main screen, touch the ← symbol.

When the time has elapsed

An audible signal will sound once the time has elapsed, and a time of 00:00 will be displayed.

If you touch the 🔔 sensor, the time will disappear.

Stopwatch function

The stopwatch function displays the time that has elapsed since activation.

This functions independently from the hotplates and from other settings. This function does not automatically switch off a hotplate.

Activating

Touch the ⏱ symbol in the main area.

The time will begin to elapse.

Pausing and deactivating

To activate the short-term timer, touch the ⏱ sensor.

To pause the time, touch ⏸ Pause. To resume the stopwatch function, touch ▷ Continue.

To cancel the cooking time, touch ✕ Reset.

To return to the main screen, touch the ← symbol.

PowerBoost function

The PowerBoost function enables you to heat up large quantities of water faster than when using heat setting 9.

This function can always be activated for a hotplate, provided the other hotplate in the same group is not in use (see illustration).

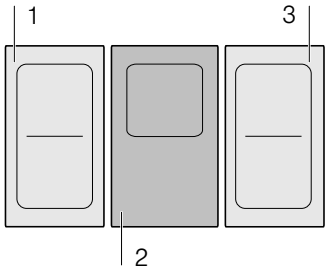

Note: The PowerBoost function can also be activated in the flexible area if the cooking zone is being used as a single hotplate.

Activation

1. Select a hotplate.
2. Press and hold boost in the settings area. The ⏱ and ⌣ symbols will be lit.

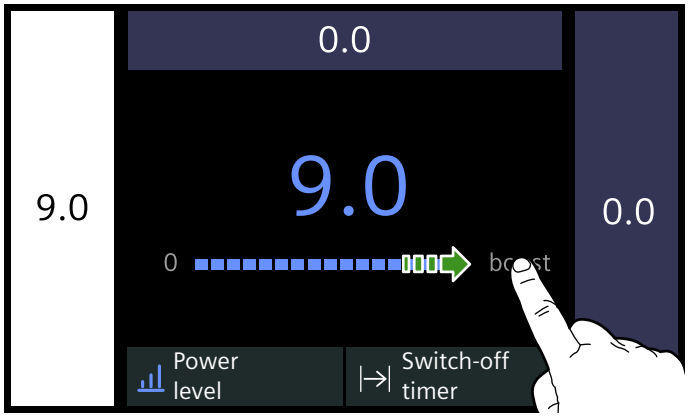

3. Without lifting your finger off, touch the ⏱ symbol. Now lift your finger off.

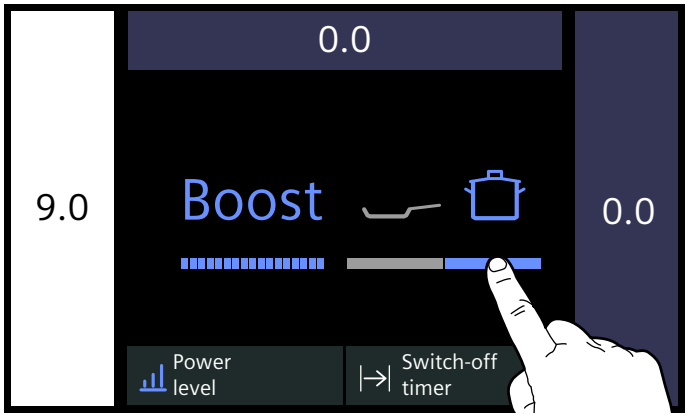

This function has now been activated.

Deactivating

Select the hotplate and set a different heat setting in the settings area.

This function has now been deactivated.

Note: In certain circumstances, the PowerBoost function can switch itself off automatically in order to protect the electronic elements inside the hob.

ShortBoost function

The ShortBoost function enables you to heat cookware faster than when using heat setting 9.

After deactivating the function, select the appropriate heat setting for your food.

This function can always be activated for a hotplate, provided the other hotplate in the same group is not in use (see illustration).

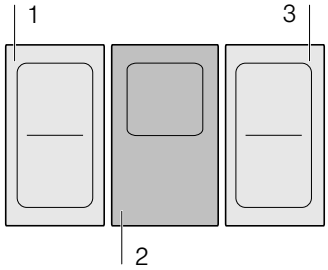

Note: With the flexible cooking zone, the ShortBoost function can be activated even if it is used as the only cooking zone.

Recommendations for use

- Always use cookware that has not been pre-heated.
- Use pots and pans with a flat base. Do not use cookware with a thin base.
- Never leave empty cookware, oil, butter or lard to heat up unattended.
- Do not place a lid on the cookware.
- Place the cookware on the centre of the hotplate. Ensure that the diameter of the base of the cookware corresponds to the size of the hotplate.
- You can find information on the type, size and positioning of the cookware in section → *"Induction cooking"*

Activation

1. Select a hotplate.
2. Press and hold boost in the settings area. The and symbols will be lit.

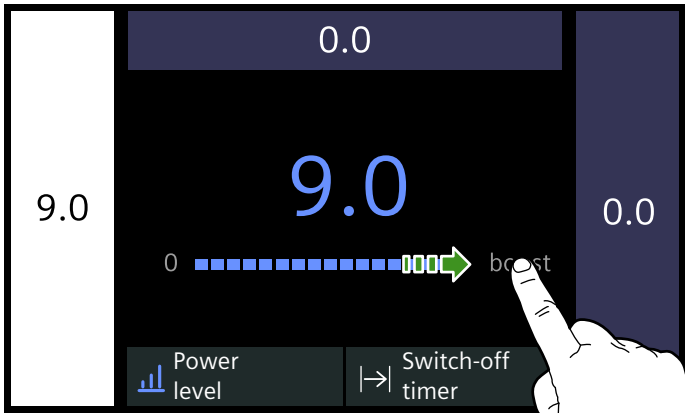

3. Without lifting your finger off, touch the symbol. Now lift your finger off.

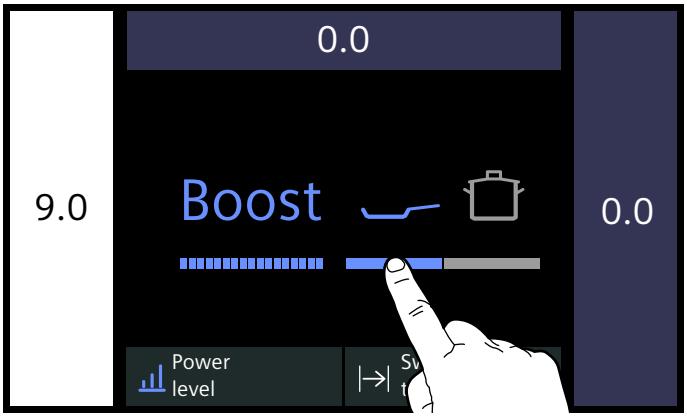

This function has now been activated.

Deactivating

Select the hotplate and set a different heat setting in the settings area.

This function has now been deactivated.

Note: In certain circumstances, the ShortBoost function can switch itself off automatically in order to protect the electronic elements inside the hob.

Keep warm function

This function is suitable for melting chocolate or butter and for keeping food warm.

Activation

1. Select a hotplate.
2. Select the first setting in the settings area. The indicator will be lit.

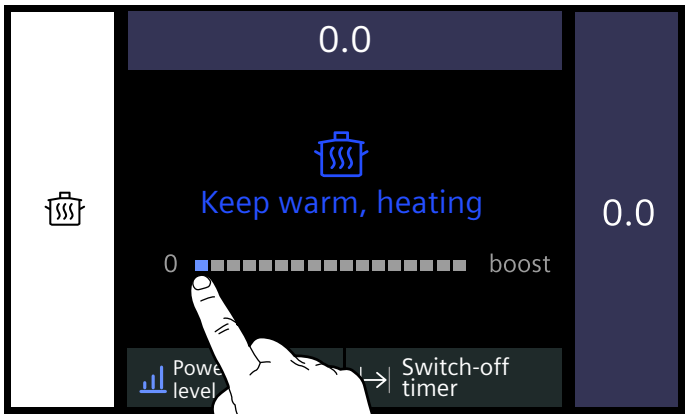

This function has now been activated.

Deactivating

1. Select the hotplate.
2. Set the heat setting to 0 in the settings area. The indicator and the cooking zone will switch themselves off.

This function has now been deactivated.

Transferring settings

You can use this function to transfer the heat setting and the programmed cooking time from one hotplate to another.

To transfer the settings, move the cookware from the cooking zone that is switched on to another cooking zone.

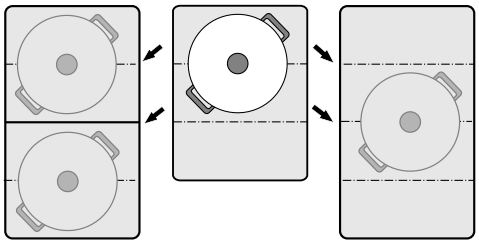

Note: You can find additional information on the positioning of the cookware in the section on → *"Flex Zone"*

Activation

1. Move the cookware from the active cooking zone to a different one.
   The cookware is detected. After a short delay, the display will give you the option to adopt the present settings for the new cooking zone.
2. Confirm settings.

The settings are transferred to the new cooking zone. The initial cooking zone is deactivated.

Notes

- When you next place the cookware in this position, the same settings will be used.
- Move the cookware only to a cooking zone that is not switched on, that you have not yet preset or on which no other cookware has been placed previously.
- The PowerBoost or ShortBoost function can only be moved from left to right or right to left if no cooking zone is active.
- If you move more than one item of cookware, the function will only be ready to use for the item of cookware that was last moved.

Cooking assist functions

The cooking assistance functions are guaranteed to make cooking easier and promise outstanding cooking results. The recommended temperature settings are suitable for any type of cooking.

They enable you to cook without using excessive heat and promise the perfect cooking and frying results.

The sensors measure the temperature of the cookware throughout the cooking process. This allows the heat setting to be adjusted to maintain the correct temperature.

Food can be added once the selected temperature has been reached. The temperature is automatically kept constant without the temperature setting having to be changed.

The cooking functions are available to all cooking zones if a wireless cooking sensor is connected.

In this section, you will find information on:

- Cooking assistance functions
- Suitable cookware
- Sensors and optional accessories
- Functions and heat settings
- Recommended dishes

Cooking assistant function types

You can use the cooking assistance functions to select the best cooking type for each kind of food.

The table shows the various function settings that are available for the cooking assistants:

Cooking assistance functions	Temperature settings	Cookware	Availability	Activate
Frying sensor				
Braising/frying with a small amount of fat	1, 2, 3, 4, 5		All cooking zones	
Cooking functions				
Heating/keeping warm	1/70 °C		All cooking zones	
Poaching	2/90 °C		All cooking zones	
Boiling	3/100 °C		All cooking zones	
Cooking in a pressure cooker	4/120 °C		All cooking zones	
Frying with a large amount of oil in the saucepan*	5/170 °C		All cooking zones	

*Preheat with the lid on and fry with the lid off.

If the hob does not have a wireless cooking sensor, this can be purchased from specialist retailers, our after-sales service or our official website.

Suitable cookware

Select the cooking zone with the diameter that most closely matches that of the base of the cookware and place the cookware in the centre of this cooking zone.

For the cooking functions, use cookware that is high enough that the required water volume lies above the silicone patch for the wireless sensor.

There are frying pans that are perfect for using with the frying sensor. These can be purchased from specialist retailers, our technical after-sales service or our official website. Quote the relevant reference number:

- HZ390210 15 cm frying pan.
- HZ390220 19 cm frying pan.
- HZ390230 21 cm frying pan.

These frying pans have a non-stick coating so that you require only a small amount of oil to fry food.

Notes

- The frying sensor has been configured specifically for this type and size of frying pan.
- Using a frying pan of a different size or one that is poorly positioned on the flexible cooking zones may result in the frying sensor not being activated. See section ⟶ *"Flex Zone"*.
- Other types of frying pan may overheat and reach a temperature above or below the selected heat setting. Try the lowest temperature setting to begin with and change it if required.

Any cookware that is suitable for induction cooking can be used with the cooking functions. You can find information on which types of cookware can be used with an induction hob in section ⟶ *"Induction cooking"*.

The cooking assistance functions table lists which cookware is suitable for which functions.

Sensors and special accessories

The sensors measure the temperature of the pot throughout the entire cooking process. This ensures that the cooking power is controlled with high precision to maintain the correct temperature and achieve optimum cooking results.

Your hob has two different temperature-measuring systems for achieving the best results:

- Temperature sensors that are located inside the hob and monitor the temperature of the base of the cookware. Suitable for the frying sensor.
- A wireless cooking sensor that transmits information about the temperature of the cookware to the control panel. Suitable for the cooking functions.

The cooking sensor is essential for using the cooking functions.

If your hob does not have a wireless cooking sensor, this can be purchased from specialist retailers, our technical after-sales service or our official website by quoting the reference number HZ39050.

You can find information about the cooking sensor in section ⟶ *"Preparing and maintaining the wireless temperature sensor"*

Functions and heat settings

Frying sensor

This function maintains the correct temperature in the frying pan as frying progresses.

Advantages

- The burner only heats up if this is necessary to retain the temperature. This saves energy and prevents the oil or fat from overheating.
- The frying sensor reports when the empty frying pan has reached the optimum temperature for adding oil and then for adding the food.

Notes

- Do not place a lid on the pan. Otherwise, the function does not activate correctly. You can use a splatter guard to prevent fat from spitting out of the pan.
- Use suitable oil or fat. If you are using butter, margarine, cold-pressed olive oil or lard, use temperature setting 1 or 2.
- Never leave fat or oil unattended while you are heating it.
- If the cooking zone is a higher temperature than the cookware or vice versa, the cooking sensor is not activated correctly.
- When frying with a large amount of oil, always use the function for deep-fat frying with a large amount of oil, level 5.

Temperature settings

Temperature setting		Suitable for
1	Very low	Preparing and reducing sauces, sweating vegetables and frying food in extra virgin olive oil, butter or margarine.
2	Low	Frying food using extra virgin olive oil, butter or margarine, e.g. omelettes.
3	Medium - low	Frying fish and Thick food, e.g. meatballs and sausages.
4	Medium - high	Frying steaks, medium or well-done, frozen, breaded and fine foods, e.g. escalope, fresh ragout and vegetables.
5	High	Frying food at high temperatures, e.g. steaks, rare, potato pancakes and Frozen French fries.

Setting procedure

Select the appropriate temperature setting from the table. Place the empty frying pan on the hotplate.

1. Select a hotplate.
2. Touch the active cooking mode and select the Frying sensor option.
3. Select the temperature setting you require and touch the cooking zone to return to the main screen.
   The function has now been activated.
   The temperature symbol on the cooking zone display will flash until the frying temperature is reached. An audible signal will sound and the temperature symbol will stop flashing.
4. Once the frying temperature has been reached, add the fat and then the food to the pan.

Note: Turn the food so that it does not burn.

Deactivating the frying sensor

1. Select the hotplate.
2. Adjust the temperature setting to 0.

This function has now been deactivated.

Note: To exit Frying sensor mode, select a different cooking mode.

Cooking functions

You can use these functions to heat, simmer or cook food, or cook it in a pressure cooker or fry it in a saucepan with sufficient oil at a controlled temperature.

These cooking functions are available for all hotplates.

Benefits

- The cooking zone only continues heating for as long as this is necessary to maintain the temperature. This saves energy and prevents oil or fat from overheating.
- The temperature is continuously monitored. This prevents the food from spilling over. In addition, the temperature setting does not need to be changed.
- A signal sounds once the water or oil has reached the optimum temperature for adding the food. The table shows if the food needs to be added right at the start.

Notes

- Use pots and pans with a thick, flat base. Do not use pots and pans with a thin or domed base.
- Fill the pot so that the contents reach high enough to cover the cooking sensor's silicone patch.
- Use the frying sensor when frying with a small amount of oil.
- Position the cookware in such a way that the cooking sensor is pointing towards the outer side of the hob.
- Do not remove the cooking sensor from the pot during cooking.
- Remove the cooking sensor from the pot after cooking. Be careful as the cooking sensor may be very hot.

Temperature ranges and settings

Cooking functions	Temperature setting	Temperature range	Suitable for
Heating, keeping warm	1/70 °C	60 - 70 °C	E.g. soups, punch
Poaching	2/90 °C	80 - 90 °C	E.g. rice, milk
Cooking	3/100 °C	90 - 100 °C	E.g. pasta, vegetables
Cooking in a pressure cooker	4/120 °C	110 - 120 °C	E.g. chicken, stew.
Frying with a large amount of oil in the saucepan	5/170 °C	170 - 180 °C	E.g. doughnuts, meatballs

Tips for cooking with the cooking functions

- Heating/keep-warm function: Frozen products in portions, e.g. spinach. Place the frozen product in the cookware. Pour in the volume of water specified by the manufacturer. Cover the cookware and select the setting 1/70 °C. Stir occasionally.
- Poaching function: This function is suitable for cooking food at low temperatures and for thickening sauces and stews. Select setting 2/90 °C.
- Boiling function: This function allows you to boil water with a lid without it boiling over. You can boil efficiently thanks to the temperature control. Select setting 3/100 °C.
- Cooking in a pressure cooker function: Follow the manufacturer's recommendations. Continue cooking for the recommended time once the signal has sounded. Select setting 4/120 °C.
- Frying with a large amount of oil in the saucepan function: To heat the oil with the lid on. Remove the lid after the signal tone and add the food (insofar as there are no other instructions in the "Recommended dishes" table). Select setting 5/170 °C.

Notes

- Always cook with the lid on. Exception: "Frying with a large amount of oil in the saucepan", temperature setting 5/170 °C.
- If an audible signal does not sound, make sure that the lid is on the pan.
- Never leave oil unattended during heating. Use oil or fat that is suitable for frying. Do not mix different cooking fats together, e.g. oil and lard. Mixtures of different fats may froth up when hot.
- If you are not satisfied with the cooking result, e.g. when cooking potatoes, next time use less water but keep the recommended temperature setting.

Setting the boiling point

The point at which water starts to boil depends on the height of your home above sea level. You can change the boiling point if water is boiling too strongly or not strongly enough. To do this, proceed as follows:

- Select the cooking function basic setting; see section ⟶ *"Basic settings"*
- The basic setting is set to 200-400 m by default. If your home is between 200 and 400 metres above sea level, you do not need to set the boiling point. Otherwise, select the setting that matches your home's height above sea level.

Note: Temperature setting 3/100 °C is sufficient for efficient boiling, even if the water does not boil very strongly. However, the boiling point can be changed. For example, you can set a lower altitude if you want the water to boil more strongly.

Setting procedure

You will need to connect the wireless cooking sensor to the control panel before using the cooking functions for the first time. Refer to the section entitled ⟶ *"Wireless temperature sensor"* to find out how to do this

1. Attach the temperature sensor to the saucepan; see the section on ⟶ *"Preparing and maintaining the wireless temperature sensor"*
2. Place a saucepan filled with sufficient liquid on the required hotplate and always put the lid on.
3. To use the cooking sensor for cooking, select the cooking zone on which the cookware is standing.
4. Touch the active cooking mode and select the Cooking functions option.
   Note: The cooking functions mode will be available once the wireless cooking sensor is connected to the control panel. See the section entitled ⟶ *"Wireless temperature sensor"*
5. Touch the symbol for the wireless temperature sensor.
6. Select the right temperature setting from the table. The function has now been activated.
   The temperature symbol will flash until the water or oil has reached the ideal temperature for adding the food. Once the selected temperature has been reached, an audible signal will sound and the temperature symbol will stop flashing.
7. Once the signal has sounded, take the lid off and add the food. Keep the lid on during cooking.
   Note: Do not cover the pan when using the "Frying with a large amount of oil in the saucepan" function.

Deactivating cooking functions

1. Select the hotplate.
2. Adjust the temperature setting to 0.

This function has now been deactivated.

Note: To exit Cooking functions mode, select a different cooking mode.

Recommended dishes

The following table shows a selection of dishes and is arranged by food type. The temperature and the cooking time depend on the amount, the condition and the quality of the food.

Meat	Cooking assistance functions	Temperature setting	Total cooking time from signal tone (min.)
Frying with little amount of oil			
Escalope, plain*	Frying sensor	4	6-10
Escalope, breaded*	Frying sensor	4	6-10
Fillet**	Frying sensor	4	6-10
Chops*	Frying sensor	3	10-15
Cordon bleu*	Frying sensor	4	10-15
Viennese schnitzel*	Frying sensor	4	10-15
Steak, rare (3 cm thick)**	Frying sensor	5	6-8
Steak, medium (3 cm thick)**	Frying sensor	5	8-12
Steak, well done (3 cm thick)*	Frying sensor	4	8-12
Poultry breast (2 cm thick)*	Frying sensor	3	10-20
Stripes of meat***	Frying sensor	4	7-12
Gyros***	Frying sensor	4	7-12
Bacon*	Frying sensor	2	5-8
Minced meat***	Frying sensor	4	6-10
Hamburgers (1,5 cm thick)*	Frying sensor	3	6-15
Meatballs (2 cm thick)*	Frying sensor	3	10-20
Rissoles*	Frying sensor	3	10-20
Pre-boiled sausages*	Frying sensor	3	8-20
Raw sausages*	Frying sensor	3	8-20
Simmering function			
Sausages****	Cooking functions	2 / 90 °C	10-20
Boiling function			
Meatballs****	Cooking functions	3 / 100 °C	20-30
Chicken****	Cooking functions	3 / 100 °C	60-90
Beef****	Cooking functions	3 / 100 °C	60-90
Cooking in pressure cooker function			
Chicken in pressure cooker*****	Cooking functions	4 / 120 °C	15-25
Beef in pressure cooker*****	Cooking functions	4 / 120 °C	15-25
Deep-frying function			
Chicken portions******	Cooking functions	5 / 170 °C	10-15
Meatballs******	Cooking functions	5 / 170 °C	10-15

* Turn several times.
** Add the oil and food to the frying pan after the signal sounds.
*** Stir regularly.
**** Heat and cook with the lid on. Add the food after the signal sounds.
***** Add the food right at the beginning.
****** Heat the oil with the lid on. Fry in portions with the lid off.

Fish	Cooking assistance functions	Temperature setting	Total cooking time from signal tone (min.)
Frying with little amount of oil			
Fish fillet, plain*	Frying sensor	4	10-20
Fish fillet, breaded*	Frying sensor	3	10-20
Prawns*	Frying sensor	4	4-8
Scampi*	Frying sensor	4	4-8
Frying fish, whole*	Frying sensor	3	10-20
Simmering function			
Stewed fish**	Cooking functions	2 / 90 °C	15-20
Deep-frying function			
Deep-frying fish in beer-batter***	Cooking functions	5 / 170 °C	10-15
Deep-frying breaded fish***	Cooking functions	5 / 170 °C	10-15

* Turn several times.
** Heat and cook with the lid on. Add the food after the signal sounds.
*** Heat the oil with the lid on. Fry in portions with the lid off.

Egg dishes	Cooking assistance functions	Temperature setting	Total cooking time from signal tone (min.)
Frying with little amount of oil			
Fried eggs in butter*	Frying sensor	2	2-6
Fried eggs in oil**	Frying sensor	4	2-6
Scrambled eggs***	Frying sensor	2	4-9
Omelettes****	Frying sensor	2	3-6
Pancakes****	Frying sensor	5	1.5- 2.5
French toast****	Frying sensor	3	4-8
Shredded raisin pancake****	Frying sensor	3	10-15
Boiling function			
Boiled eggs*****	Cooking functions	3 / 100 °C	5-10

* Add the butter and food to the frying pan after the signal sounds.
** Add the oil and food to the frying pan after the signal sounds.
*** Stir regularly.
**** Total cooking time per portion. Fry one after the other.
***** Add the food right at the beginning.

Vegetables and legumes	Cooking assistance functions	Temperature setting	Total cooking time from signal tone (min.)
Frying with little amount of oil			
Garlic*	Frying sensor	2	2-10
Glazed onion*	Frying sensor	2	2-10
Onion rings*	Frying sensor	3	5-10
Courgette**	Frying sensor	3	4-12
Aubergine**	Frying sensor	3	4-12
Pepper*	Frying sensor	3	4-15
Green asparagus**	Frying sensor	3	4-15
Mushrooms*	Frying sensor	4	10-15
Sautéing vegetables in oil*	Frying sensor	1	10-20
Glazed vegetables*	Frying sensor	3	6-10
Boiling function			
Broccoli***	Cooking functions	3 / 100 °C	10-20
Cauliflower***	Cooking functions	3 / 100 °C	10-20
Brussels sprouts***	Cooking functions	3 / 100 °C	30-40
Green beans***	Cooking functions	3 / 100 °C	15-30
Chickpeas****	Cooking functions	3 / 100 °C	60-90
Peas***	Cooking functions	3 / 100 °C	15-20
Lentils****	Cooking functions	3 / 100 °C	45-60
Cooking in pressure cooker function			
Vegetables in pressure cooker****	Cooking functions	4 / 120 °C	3-6
Chickpeas in pressure cooker****	Cooking functions	4 / 120 °C	25-35
Beans in pressure cooker****	Cooking functions	4 / 120 °C	25-35
Lentils in pressure cooker****	Cooking functions	4 / 120 °C	10-20
Deep-frying function			
Deep-frying breaded vegetables*****	Cooking functions	5 / 170 °C	4-8
Deep-frying vegetables in beer batter*****	Cooking functions	5 / 170 °C	4-8
Deep-frying breaded mushrooms*****	Cooking functions	5 / 170 °C	4-8
Deep-frying mushrooms in beer batter*****	Cooking functions	5 / 170 °C	4-8

* Stir regularly.
** Turn several times.
*** Heat and cook with the lid on. Add the food after the signal sounds.
**** Add the food right at the beginning.
***** Heat the oil with the lid on. Fry in portions with the lid off.

Potatoes	Cooking assistance functions	Temperature setting	Total cooking time from signal tone (min.)
Frying with little amount of oil			
Potatoes boiled in their skin*	Frying sensor	5	6-12
Fried potatoes made from raw potatoes*	Frying sensor	4	15-25
Potato pancakes**	Frying sensor	5	2.5-3.5
Swiss rösti***	Frying sensor	2	50-55
Glazed potatoes*	Frying sensor	3	15-20
Simmering function			
Potato dumplings****	Cooking functions	2 / 90 °C	30-40
Boling function			
Boiling potatoes*****	Cooking functions	3 / 100 °C	30-45
Cooking in pressure cooker function			
Potatoes in pressure cooker*****	Cooking functions	4 / 120 °C	10-20

* Stir regularly.
** Total cooking time per portion. Fry one after the other.
*** Add the butter and food to the frying pan after the signal sounds.
**** Heat and cook with the lid on. Add the food after the signal sounds.
***** Add the food right at the beginning.

Pasta and cereals	Cooking assistance functions	Temperature setting	Total cooking time from signal tone (mins)
Simmering function			
Rice*	Cooking functions	2 / 90 °C	25 - 35
Polenta**	Cooking functions	2 / 90 °C	3 - 8
Semolina puree**	Cooking functions	2 / 90 °C	5 - 10
Boiling function			
Pasta**	Cooking functions	3 / 100 °C	7 - 10
Stuffed pasta**	Cooking functions	3 / 100 °C	6 - 15
Cooking in pressure cooker function			
Rice in pressure cooker***	Cooking functions	4 / 120 °C	6 - 8

* Heat and cook with the lid on. Add the food after the signal sounds.
** Stir regularly.
*** Add the food right at the beginning.

Soups	Cooking assistance functions	Temperature setting	Total cooking time from signal tone (mins)
Simmering function			
Creamy soups*	Cooking functions	2 / 90 °C	10 - 15
Boiling function			
Homemade stock**	Cooking functions	3 / 100 °C	60 - 90
Instant soups*	Cooking functions	3 / 100 °C	5 - 10
Cooking in pressure cooker function			
Homemade stock in pressure cooker**	Cooking functions	4 / 120 °C	20 - 30

* Stir regularly.
** Add the food right at the beginning.

Sauces	Cooking assistance functions	Temperature setting	Total cooking time from signal tone (mins)
Frying with little amount of oil			
Tomato sauce with vegetables*	Frying sensor	1	25 - 35
Béchamel sauce*	Frying sensor	1	10 - 20
Cheese sauce*	Frying sensor	1	10 - 20
Reducing sauces*	Frying sensor	1	25 - 35
Sweet sauces*	Frying sensor	1	15 - 25
* Stir regularly			

Desserts	Cooking assistance functions	Temperature setting	Total cooking time from signal tone (min.)
Simmering function			
Rice pudding*	Cooking functions	2 / 90 °C	40-50
Porridge oats*	Cooking functions	2 / 90 °C	10-15
Chocolate pudding*	Cooking functions	2 / 90 °C	3-5
Boiling function			
Compote**	Cooking functions	3 / 100 °C	15-25
Deep-frying function			
Deep-frying Berliners***	Cooking functions	5 / 170 °C	5-10
Deep-frying Doughnuts***	Cooking functions	5 / 170 °C	5-10
Deep-frying Buñuelos***	Cooking functions	5 / 170 °C	5-10
* Stir regularly.			
** Add the food right at the beginning.			
*** Heat the oil with the lid on. Fry in portions with the lid off.			

Frozen products	Cooking assistance functions	Temperature setting	Total cooking time from signal tone (min.)
Frying with little amount of oil			
Escalope*	Frying sensor	4	15-20
Cordon bleu*	Frying sensor	4	10-30
Poultry breast*	Frying sensor	4	10-30
Chicken nuggets*	Frying sensor	4	10-15
Gyros**	Frying sensor	4	10-15
Kebab**	Frying sensor	4	10-15
Fish fillet, plain*	Frying sensor	3	10-20
Fish fillet, breaded*	Frying sensor	3	10-20
Fish fingers*	Frying sensor	4	8-12
French Fries**	Frying sensor	5	4-6
Stir-fries**	Frying sensor	3	6-10
Spring rolls*	Frying sensor	4	10-30
Camembert*	Frying sensor	3	10-15
* Turn several times.			
** Stir regularly.			
*** Heat and cook with the lid on. Add the food after the signal sounds.			
**** Heat the oil with the lid on. Fry in portions with the lid off.			

Frozen products	Cooking assistance functions	Temperature setting	Total cooking time from signal tone (min.)
Keeping warm, heating function			
Vegetables with cream**	Cooking functions	1 / 70 °C	15-20
Boiling function			
Green beans***	Cooking functions	3 / 100 °C	15-30
Deep-frying function			
Deep-frying French Fries****	Cooking functions	5 / 170 °C	4-8

* Turn several times.
** Stir regularly.
*** Heat and cook with the lid on. Add the food after the signal sounds.
**** Heat the oil with the lid on. Fry in portions with the lid off.

Miscellaneous	Cooking assistance functions	Temperature setting	Total cooking time from signal tone (min.)
Frying with little amount of oil			
Camembert*	Frying sensor	3	7-10
Croûtons**	Frying sensor	3	6-10
Dried ready meals***	Frying sensor	1	5-10
Toasting almonds****	Frying sensor	4	3-15
Toasting nuts****	Frying sensor	4	3-15
Toasting pine nuts****	Frying sensor	4	3-15
Keeping warm, heating function			
Heating goulash soup*****	Cooking functions	1 / 70 °C	10-20
Heating hot spiced wine*****	Cooking functions	1 / 70 °C	-
Simmering function			
Heating milk*****	Cooking functions	2 / 90 °C	3-10

* Turn several times.
** Stir regularly.
*** Add the water after the signal sounds. Add the food once the water has boiled.
**** Add the food to the frying pan after the signal sounds.
***** Add the food right at the beginning.

Dish assistant

This function can be used to cook a wide variety of food.The appliance will choose the optimal setting for you.

Selecting and setting the programme

1. Select a hotplate.
2. Touch the active cooking mode and select the Dish assistant option.
3. Select the programme group you require.
4. Select the type of food you want to cook.

You will be guided through the entire setting procedure for the food you have selected, and will be provided with information on how to cook it.

Cancelling a programme

To cancel a programme, select power setting 0 or change the type of heating.

Wireless temperature sensor

You will need to connect the wireless temperature sensor to the control panel before using the cooking functions for the first time.

Preparing and maintaining the wireless temperature sensor

This section provides information on:

- Adhering the silicone patch
- Using the wireless cooking sensor
- Cleaning
- Changing the battery

The silicone patch and the cooking sensor can be purchased at a later time from specialist retailers, our technical after-sales service or our official website. To do this, quote the relevant reference number:

00577921	Set of 5 silicone patches
HZ39050	Cooking sensor and set of 5 silicone patches

Adhering the silicone patch

The silicone patch attaches the temperature sensor to the cookware.

When a pan is used for the first time with the cooking functions, the silicone patch must be adhered directly to the pan. It is important

1. That the adhesive area on the pan is free from grease. Clean the pan, dry it thoroughly and wipe the adhesive area with a spirit.
2. Remove the protective film from the silicone patch. Adhere the silicone patch to the outside of the pan in the correct place using the enclosed template as a guide.

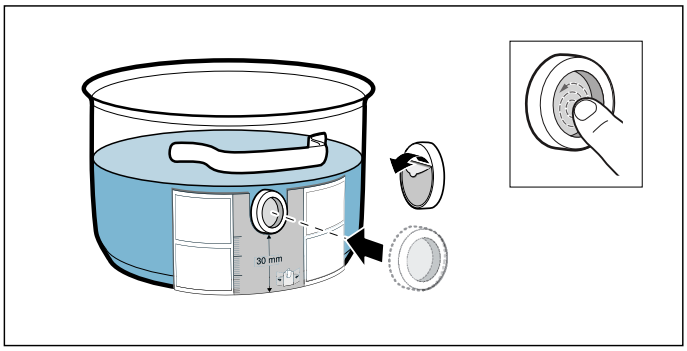

3. Press down all over the surface of the silicone patch, including in the centre.

The adhesive requires one hour to fully harden. Do not use or clean the pan during this time.

Notes

- Do not leave the pan with the silicone patch to soak soapy water for long periods of time.
- If the silicone patch comes off, attach a new one.

Fitting the wireless temperature sensor

Attach the temperature sensor to the silicone patch and align it correctly.

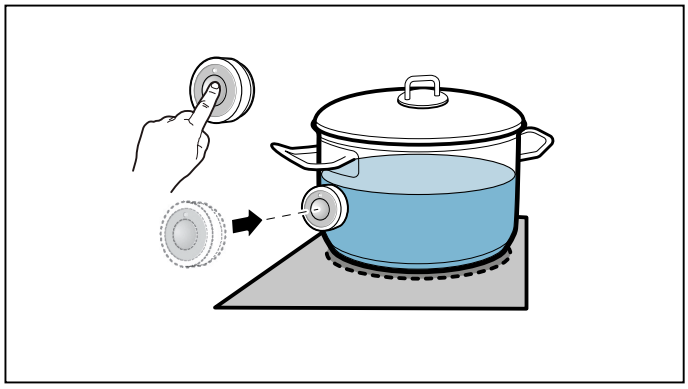

Notes

- Make sure that the silicone patch is completely dry before attaching the temperature sensor.
- Position the cookware in such a way that the temperature sensor is pointing towards the outer side of the hob.
- To prevent overheating, the temperature sensor must not be pointed towards another item of cookware that is hot.
- Remove the temperature sensor from the saucepan after cooking. Store it in a clean, safe place away from sources of heat.
- You can use up to three temperature sensors at the same time.

Connecting the wireless temperature sensor to the control panel

To connect the wireless temperature sensor to the control panel, follow the instructions below:

1. Open the docking menu.
2. Open the basic settings and select "Cooking sensor" from the menu.
3. Select the Add a new cooking sensor option.
   Press the symbol on the wireless temperature sensor within 30 seconds.
   After a few seconds, the status of the connection between the temperature sensor and the control panel will appear on the display.

The cooking functions are made available once the cooking sensor has been connected to the control panel correctly.

Notes

- If there is a fault with the cooking sensor, the connection may not be established correctly for the following reasons:
  - Bluetooth communication error.
  - The symbol on the cooking sensor was not pressed within 30 seconds.
  - The battery in the cooking sensor is drained.

  Reset the cooking sensor and repeat the connection procedure.

- If the temperature sensor and the control panel are not connected correctly due to a transmission error, repeat the connection procedure.
  If the display continues to indicate a connection error, contact our technical after-sales service.

Resetting the wireless temperature sensor

1. Touch the symbol on the cooking sensor for approximately 8-10 seconds.
   While you are doing this, the temperature sensor's LED indicator will light up three times. When the LED lights up for the third time, it will start to reset the temperature sensor. Stop touching the symbol when this happens.
   Once the LED goes out, this means that the wireless temperature sensor has been reset.
2. Repeat the connection procedure.

Cleaning

Do not clean the wireless temperature sensor in the dishwasher.

Temperature sensor

Clean the temperature sensor with a damp cloth. Never clean it in the dishwasher. Do not immerse it in water or clean it under running water.

Remove the temperature sensor from the saucepan after cooking. Store it in a clean, safe place (such as in its packaging) away from sources of heat.

Silicone patch

Clean and dry before attaching to the temperature sensor. Dishwasher safe.

Note: Cookware with the silicone patch must not be left to soak for long periods in soapy water.

Temperature sensor window

The sensor window must always be clean and dry. Proceed as follows:

- Remove dirt and oil splatters regularly.
- Use a soft cloth or cotton buds and window cleaner for cleaning.

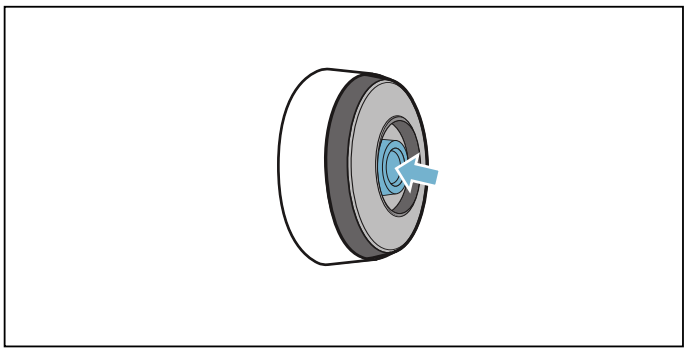

Notes

- Do not use abrasive cleaning agents such as scouring pads, scrubbing brushes or cream cleaners.
- Do not touch the sensor window with your fingers. This may make it dirty or scratch it.

Changing the battery

If the temperature sensor does not light up when the symbol is pressed, the battery is flat.

Changing the battery:

1. Remove the silicone cover from the lower section of the temperature sensor housing and remove both screws using a screwdriver.

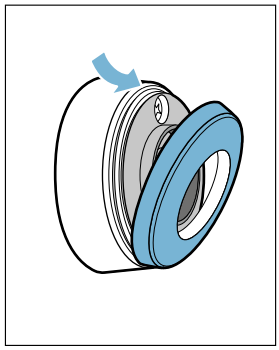

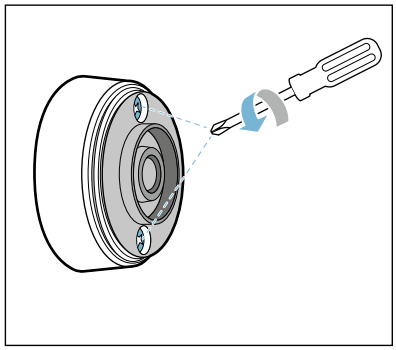

2. Open the closure of the temperature sensor. Remove the battery from the lower section of the housing and insert a new battery (pay attention to the correct orientation of the battery poles).

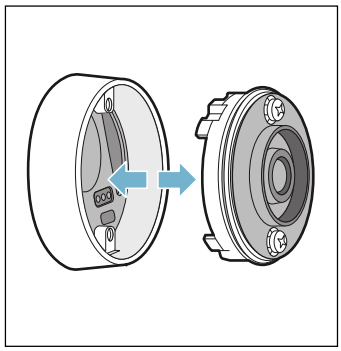

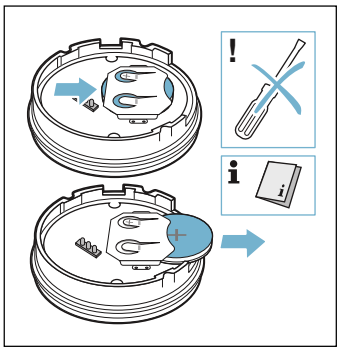

Caution!
Do not use any metal objects to remove the battery. Do not touch the battery connection points.

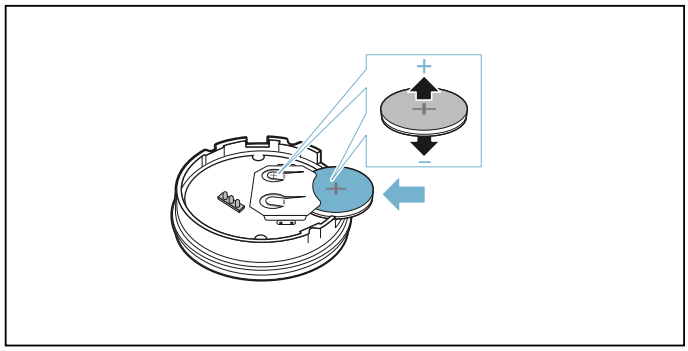

3. Close the closure of the temperature sensor (the notches for the screws on the closure must align with the notches on the lower section of the housing). Tighten the screws with a screwdriver.

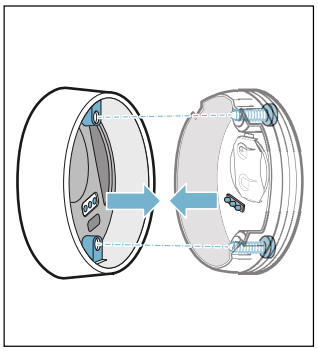

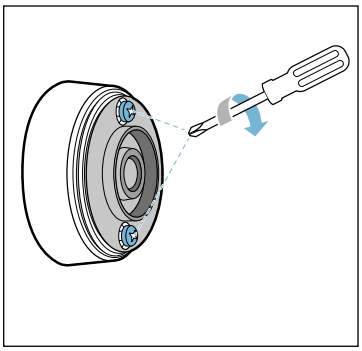

4. Reattach the silicone cover to the lower section of the temperature sensor housing.

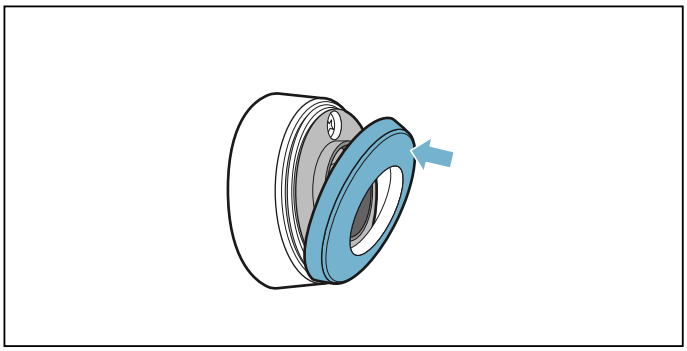

Note: Use only high-quality batteries of the type CR2032 in order to guarantee a long service life.

Declaration of Conformity

BSH Hausgeräte GmbH hereby declares that the appliance with wireless temperature sensor function meets the basic requirements and other relevant provisions of the Directive 2014/53/EU.

A detailed RED Declaration of Conformity can be found online at www.siemens-home.bsh-group.com on the product page of your appliance with the additional documents.

The logos and the Bluetooth® brand are registered trademarks and property of Bluetooth SIG, Inc. These trademarks are used by BSH Hausgeräte GmbH under licence. All other trademarks and brand names are owned by the respective companies.

Childproof lock

You can use the childproof lock to prevent children from switching on the hob.

Activating and deactivating the childproof lock

All cooking zones must be switched off.

Activation

1. Open the docking menu.
2. Touch the symbol.

The childproof lock is now activated. The hob is now locked.

Deactivating

Follow the instructions on the display panel.

The lock is now released.

Childproof lock

With this function, the childproof lock automatically activates when a hob is switched off.

Switching on and off

You can find out how to switch the automatic childproof lock on in the → *"Basic settings"* section

Wipe protection

Wiping over the control panel while the hob is switched on may alter the settings. To avoid doing this, you can use the hob's "Lock control panel for cleaning" function.

Activation

Open the docking menu and touch the symbol.

An audible signal will sound. The control panel will remain locked for 30 seconds.

You will now be able to clean the surface of the control panel without altering the settings.

Deactivating

After 30 seconds, an audible signal will sound and the control panel will be unlocked.To deactivate the function early, follow the instructions on the display panel.

Note: The cleaning lock does not lock the main switch.The hob can be switched off at any time.

Automatic safety cut-out

If a cooking zone operates for an extended period and no settings are changed, the automatic safety switch-off is activated.

This stops the cooking zone from heating up. A notification will appear on the display.

Touching any symbol will switch off the display. The cooking zone can now be reset.

The point at which the automatic safety switch-off becomes active depends on the power setting in use (after 1 to 10 hours).

Basic settings

The appliance has various basic settings. You can adapt these settings to your personal requirements.

Settings	Description and options
Language	You can change the language of the appliance.
Home Connect	Using this function, you can connect your appliance to your home network and a mobile end device.
cookConnect hood control	You can use this to control important functions of your cooker hood via your hob, e.g. the fan speed and light.
Signal tones	You can select which signal tones the appliance should sound.
Signal duration	You can change the duration of the signal tones.
Button tone	You can choose whether or not the appliance will sound when fields and symbols are touched on the touchscreen.
Display brightness	You can change the brightness of the display.
flexInduction	You can choose whether the Flex areas will work as one or separately when you switch on the hob.
powerMove levels	You can change the preset settings for the cooking areas for the Move function.
Childproof lock	You can use the child safety lock to lock the hob and prevent children from using it without supervision.
quickStop	Allows the cooking zone to be switched off quickly directly on the main display.
Brand logo	You can choose whether or not the brand logo will be displayed when the hob is switched on.
reStart	You can set how long your appliance saves the most recently used settings after it has been switched off.
Max. power consumption	You can restrict the hob's total power and adapt it to the local mains connection.
Energy consumption	You can choose whether or not the appliance displays its energy consumption after it has been switched off.
Cooking sensor	You can add a new temperature sensor.
Cooking function	You can enter your height above sea level to improve the cooking sensor's accuracy.
Cookware test	You can check whether or not your cookware is suitable for induction cooking.
Appliance info.	You can view information about your appliance.
Factory settings	You can reset all the settings to the factory settings.

To go to the basic settings:

Open the docking menu and touch the ⚙⚙ symbol. All cooking zones must be switched off.

Basic settings menu

Slide your finger up or down to scroll through the available settings. Touch a setting to access further options in its sub-menu.

Within a sub-menu, touch the "←" symbol to return to the previous menu.

Exiting the basic settings

Touch the ← symbol to leave the "Basic settings" menu.

Saving or discarding changes

If changes have been made, when you exit the basic settings you will see a confirmation screen asking you if you wish to save or reject any changes made.

Energy consumption indicator

This function indicates the total amount of energy consumed by this hob the last time it was used for cooking.

Once switched off, the energy consumption in kWh will be displayed for 10 seconds.

You can find out how to switch this function on in the section on → *"Basic settings"*

Cookware check

This function can be used to check the speed and quality of the cooking process depending on the cookware.

The result is a reference value and depends on the properties of the cookware and the hotplate being used.

1. Fill the pan with approximately 200 ml water and place it at room temperature in the middle of the hotplate that most closely matches the diameter of the pan base.
2. Call up the basic settings and select the Cookware test option. Follow the instructions on the display panel.
   The function has now been activated.

After 10 seconds, information on the quality and speed of the cooking process will appear in the hotplate displays.

If the test result is not as good as it could be, test the saucepan again on one of the smaller hotplates.

To repeat the test, call up the basic settings again and select the Cookware test option.

Notes

- The flexible cooking zone only counts as a single hotplate; place no more than one item of cookware on it.
- If the diameter of the hotplate used is much smaller than the diameter of the cookware, only the middle of the cookware can be expected to heat up. This may result in the cooking results not being as good as expected or being less than satisfactory.
- You can find information on this function in the section on → *"Basic settings"*.
- You can find information on the type, size and positioning of the cookware in the sections on → *"Induction cooking"* and → *"Flex Zone"*.

Home Connect

This appliance is WLAN-enabled and settings can be sent to the appliance via a mobile device.

If the appliance is not connected to the home network, the appliance functions in the same way as a hob with no network connection. The hob can always be operated via the control panel.

The availability of the Home Connect function depends on the availability of Home Connect services in your country. Home Connect services are not available in every country.You can find more information on this at www.home-connect.com.

Notes

- Hobs are not designed to be used unattended - you must always keep an eye on the cooking process.
- Ensure that you follow the safety instructions in this instruction manual and that these are also observed when operating the appliance via the Home Connect app. You must also follow the instructions in the Home Connect app.⟶ *"Important safety information" on page 6*
- Using the Home Connect app, you can send settings to your appliance and then have to confirm them on the appliance. It is not possible to operate the appliance whilst you are away from home.
- Operation on the appliance always has priority. During this time, it is not possible to operate the appliance using the Home Connect app.

Setting up

To implement settings via Home Connect, you must have installed and set up the Home Connect app on your mobile device.

Observe the Home Connect documents supplied for this.

Follow the steps specified by the app to make the settings.

The app must be open in order to perform the setup process.

Automatic registration in the home network

You require a router that has WPS functionality.

You require access to your router.If you do not have this, follow the steps for "Manually logging into your home network".

1. Touch the ⚙⚙ symbol in the docking menu to open the basic settings.
2. Touch the "Home Connect" setting.
3. Touch "Use assistant to configure settings" to launch the Home Connect assistant.

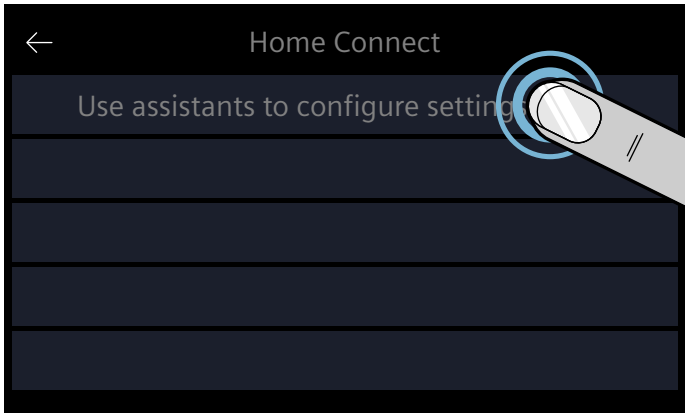

A message will appear regarding the mobile device.

4. Touch "Next" to continue.
5. Press the WPS button on the router within the next 2 minutes.
   A message will be displayed to notify you when the hob is successfully connected to your home network.
   Note: If it is unable to connect, relaunch the assistant or manually log the appliance into your home network.
   A message will appear to say that the appliance can now be connected to the app.
6. Touch "Next" to begin the process of connecting to the app.

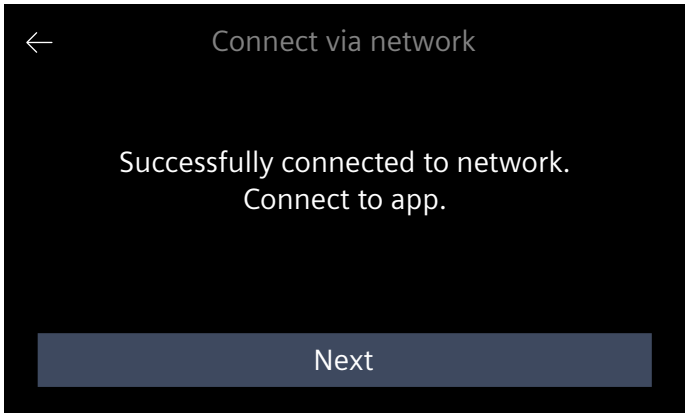

Once the login process is complete, a message will appear to say that it has been successful. The ⊛ symbol will appear in the main area on the control panel.

Manual registration in the home network

1. Touch the ⚙⚙ symbol in the docking menu to open the basic settings.
2. Touch the "Home Connect" setting.
3. Touch "Use assistant to configure settings" to launch the Home Connect assistant.
   You will be asked to press the WPS button on your router.
4. Select "WPS not supported".

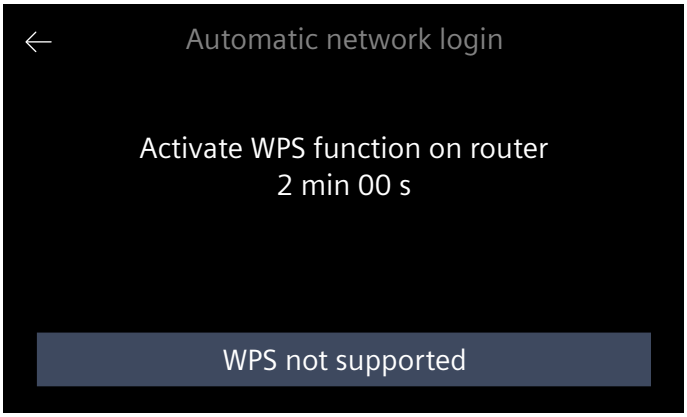

5. Read the message and touch "Start" to continue.
6. Open the network settings on your mobile device and use the SSID "Home Connect" and the key "Home Connect" to log your mobile device into the hob network.

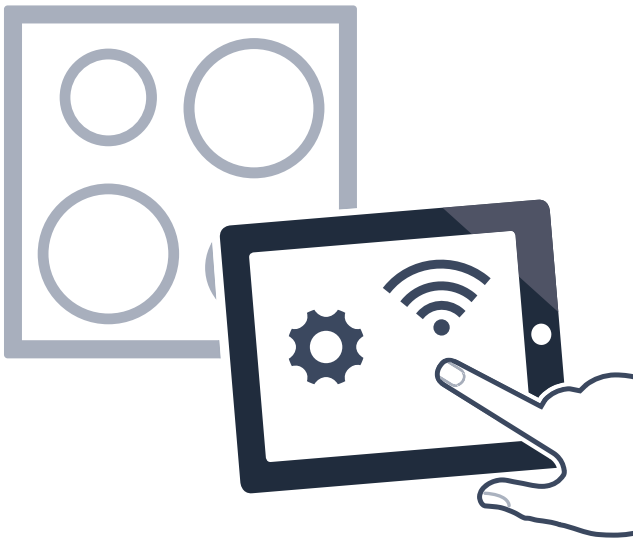

Note: If it is unable to connect, relaunch the assistant and manually log the appliance into your home network.

7. Follow the prompt in the app and enter the name and password for your home network (Wi-Fi).
   A message will appear to say that the appliance can now be connected to the app.
8. Touch "Next" to begin the process of connecting to the app.

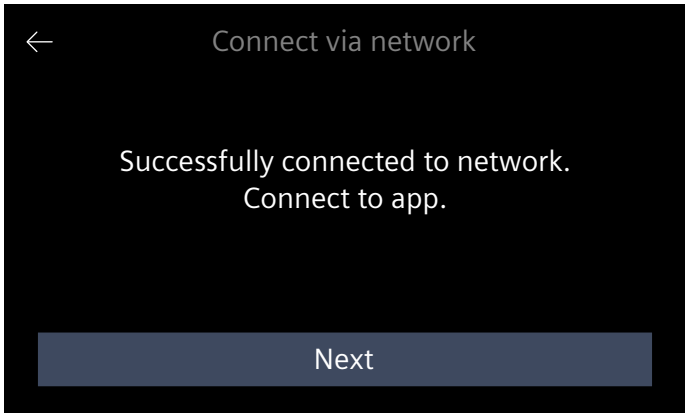

Once the login process is complete, a message will appear to say that it has been successful. The ᯤ symbol will appear in the main area on the control panel.

Home Connect settings

You can adjust Home Connect to suit your requirements at any time.

In the basic settings for your hob, navigate to the Home Connect settings to display network and appliance information.

Setting	Description and options
Use assistant to configure settings	The hob can be set up to automatically log into your home network, or you can do this manually. ■ Use assistant to configure settings (automatic login to your home network) ■ Use assistant to configure settings: WPS not supported (manually log into your home network) **Note:** This setting is only displayed if the hob is not yet connected to your home network.
Connect to app	You can connect to one or more Home Connect accounts. **Note:** This setting is only displayed if the hob is connected to your home network.
Configure settings via app	You can choose whether to allow cooking settings to be sent. ■ No – The app will only show you the hob's current statuses. ■ Yes – Cooking settings can be sent from the app to the hob. You will need to confirm that you wish to use any cooking settings that are sent to the hob. **Note:** This setting is only displayed if the hob is connected to your home network.
Wi-Fi	You can switch off the hob's wireless module to disconnect it from the Wi-Fi. ■ Off – Wireless module switched off. ■ On – Wireless module switched on. **Note:** This setting is only displayed if the hob is connected to your home network.
Disconnect	You can reset the connections you have saved for your home network at any time. **Note:** This setting is only displayed if the hob is connected to your home network.
Appliance information	This displays information on HomeConnect and the network. **Note:** This setting is only displayed if the hob is connected to your home network.
* Default setting when delivered	

Note: "Use assistant to configure settings" is only displayed if the appliance is not yet connected to your home network. All other settings are only displayed if the appliance is already connected to your home network.

Wi-Fi symbols

The Wi-Fi symbol in the main area on the control panel changes depending on the signal strength, the availability of the Home Connect server or in the event that the appliance is being remotely accessed by our after-sales service.

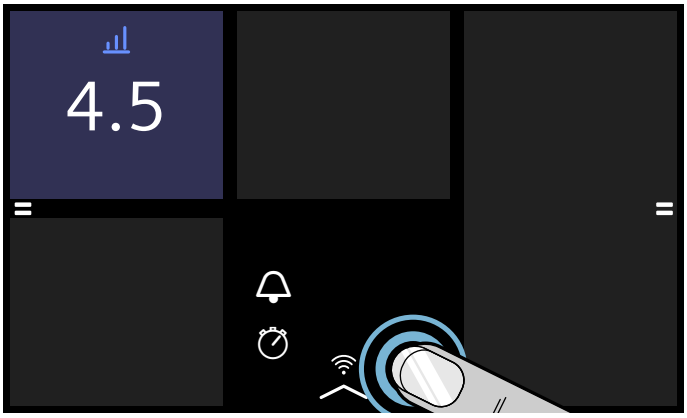

You can call up a description of the symbol being displayed. To do this, touch and hold the symbol for at least 2 seconds, or until the description appears.

Deactivating WLAN

If Wi-Fi has been activated, you can use the Home Connect functions.

Note:
In networked standby mode, your appliance requires a maximum of 2 W.

1. Touch the ⚙ symbol in the docking menu to open the basic settings.
2. Touch the "Home Connect" setting.
3. Touch "Wi-Fi".
4. Touch "Off".

This deactivates Wi-Fi; the symbol will go out on the control panel.

Disconnecting from the network

You can disconnect your hob from the network at any time.

Note:
If your hob is disconnected from the network, it is not possible to operate it using Home Connect.

1. Touch the ⚙ symbol in the docking menu to open the basic settings.
2. Touch the "Home Connect" setting.
3. Touch "Disconnect".
4. Touch "Next" to confirm.

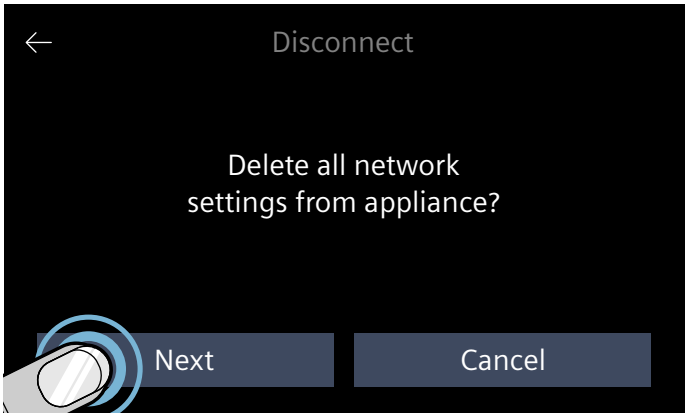

This disconnects the appliance from your home network; the symbol will go out on the control panel.

Note:
The network connection will also be deleted if you restore the factory settings on your appliance.

Connecting to the network

1. Touch the ⚙ symbol in the docking menu to open the basic settings.
2. Touch the "Home Connect" setting.
3. Touch "Connect to network".
4. Follow the instructions in the section entitled "Manually logging into your home network" or "Automatic login to your home network".

Connect to the app

If the Home Connect app is installed on your mobile device, you can connect it to your hob.

Notes
- The appliance must be connected to the network.
- The app must be open and be set up.
- If your extractor hood is directly connected, first disconnect the hob from your home network and then initiate the connection process again.⟶ *"Disconnecting from the network" on page 42*⟶ *"Connecting to the network" on page 42*

1. Touch the ⚙ symbol in the docking menu to open the basic settings.
2. Touch the "Home Connect" setting.
3. Touch “Connect to app”.

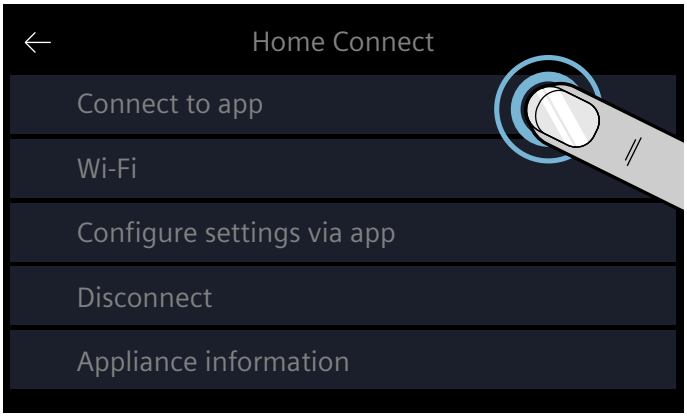

You can also connect a second Home Connect account to the hob. To do this, touch "Connect to another app".
4. Follow the instructions in the app to complete the connection process.

Settings via app

Using the Home Connect app, you can easily access the basic settings for your hob and send settings for the cooking zones to the hob.

Notes

- Before you can change the basic settings, the hob must be switched off.
- If the appliance is being operated by means of the controls on the appliance itself, this mode of operation always has priority. During this time, it is not possible to operate the appliance using the Home Connect app.
- When the appliance is delivered, the settings transmission option is already activated by default.
- If the settings transmission option has been deactivated, only the hob's operating statuses will be displayed in the Home Connect app.

1. Touch the ⚙⚙ symbol in the docking menu to open the basic settings.
2. Touch the "Home Connect" setting.
3. Touch "Configure settings via app".

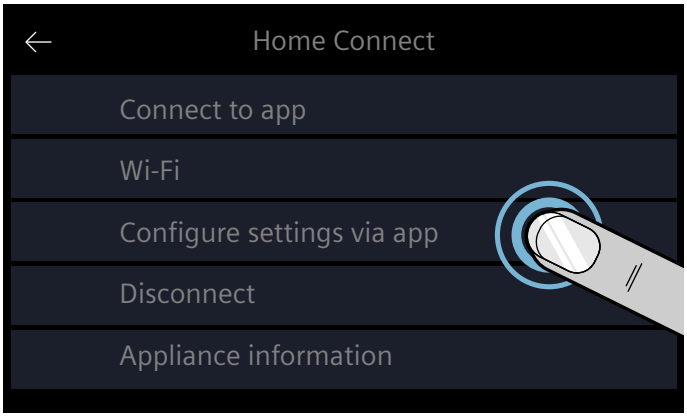

4. To activate the settings transmission option, touch "Yes"; to deactivate the settings transmission option, touch "No".

Confirming settings

Once cooking settings have been successfully transmitted to a cooking zone, a message will appear on the hob. You will be asked whether you want to use these settings. To confirm that you want to use these settings, touch "Accept settings". To reject these settings, touch "Discard".

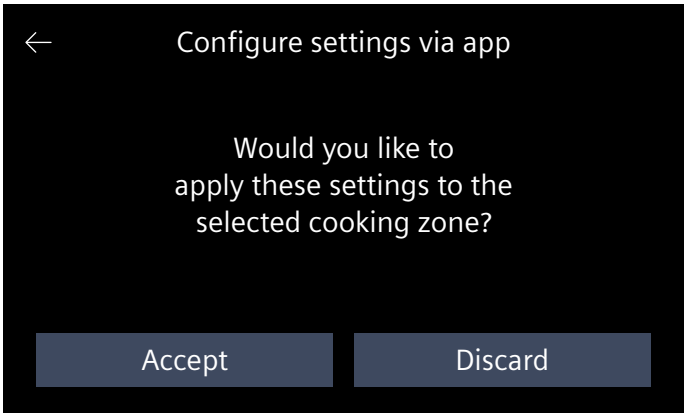

Software update

Using the software update function, your hob's software can be updated (e.g. for the purpose of optimisation, troubleshooting or security updates). To do this, you need to be a registered Home Connect user, have installed the app on your mobile device and be connected to the Home Connect server.

As soon as a software update is available, you will be informed by the Home Connect app and will be able to start the software update via the app or on the hob. To do this, open the basic settings for your hob.An assistant will appear to guide you through the update.

Once the update has been successfully downloaded, you can start installing it via the Home Connect app if you are on your local area network.

The Home Connect app will inform you once installation is complete.

Notes

- You can continue to use your hob as normal while updates are downloading.
- Depending on your personal settings in the app, software updates can also be set to download automatically.
- We recommend that you install security updates as soon as possible.

About data protection

When your appliance is connected for the first time to a WLAN network, which is connected to the Internet, your appliance transmits the following categories of data to the Home Connect server (initial registration):

- Unique appliance identification (consisting of appliance codes as well as the MAC address of the installed WiFi communication module).
- Security certificate of the WiFi communication module (to ensure a secure IT connection).
- The current software and hardware version of your domestic appliance.
- Status of any previous resetting to factory settings.

This initial registration prepares the Home Connect functions for use and is only required when you want to use these Home Connect functions for the first time.

Note: Ensure that the Home Connect functions can be used only in conjunction with the Home Connect app. Information on data protection can be accessed in the Home Connect app.

Declaration of Conformity

BSH Hausgeräte GmbH hereby declares that the appliance which features Home Connect is in accordance with the basic requirements and the other relevant provisions of the directive 2014/53/EU.

A detailed RED Declaration of Conformity can be found online at www.siemens-home.bsh-group.com on the product page of your appliance with the additional documents.

CE

Hood connection

You can connect this appliance to a suitable extractor hood and control the functions of the hood via your hob.

There are various options for connecting the appliances together:

Home Connect

Two appliances can be connected using the Home Connect app provided that both of them are Home Connect-compatible.

Observe the supplied Home Connect documents for this.

Connecting appliances directly

If the appliance is directly connected to a cooker hood, connection to the home network is no longer possible. The appliance functions in the same way as a hob with no network connection. The hob can always be operated via the control panel.

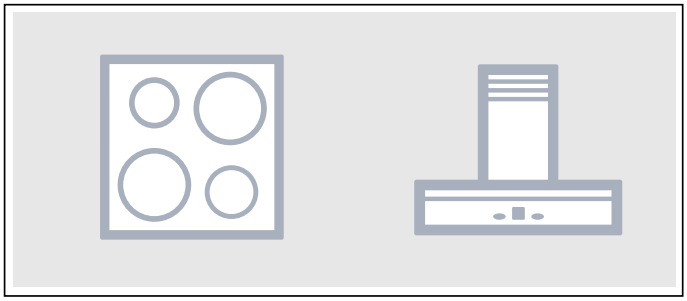

Connecting appliances via the home network

If the appliances are connected to each other via your home network, both the hood controls and Home Connect can be used to operate the hob.

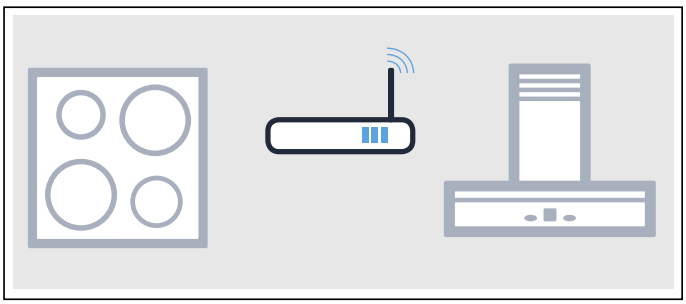

Notes

- Make sure you follow the safety instructions in the instruction manual for your extractor hood and that these are also observed when operating the appliance via the hood controls on the hob.→ *"Important safety information" on page 6*
- Using the controls on the extractor hood always takes priority. It is not possible to use the hood controls on the hob during this time.
- In networked standby mode, your appliance requires max. 2 W.

Setting up

To set up the connection between the hob and the extractor hood, the hob must be switched on.

Connecting directly

Make sure that the extractor hood is switched off.

For more information refer to the section entitled "Connecting to the hob" in the instruction manual for your extractor hood.

Note: If you connect your hob directly to the extractor hood, it cannot be connected to your home network as well and you will not be able to use Home Connect.

1. Touch the ⚙ symbol in the docking menu to open the basic settings.
2. Touch the "Hood controls" setting.
3. Touch "Connect directly".
4. You have 2 minutes to initiate the connection process on the extractor hood.

A message will be displayed to notify you when the hob is successfully connected to the extractor hood. The symbols for the hood controls on the hob are displayed in the settings area.

Connecting via your home network

You require a router that has WPS functionality.

You require access to your router.If you do not have this, follow the steps for "Direct connection".

When you begin, make sure that the extractor hood is on your home network.

1. Touch the ⚙ symbol in the docking menu to open the basic settings.
2. Touch the "Hood controls" setting.
3. Touch "Connect via home network".
4. Press the WPS button on the router within the next 2 minutes.
   A message will be displayed to notify you when the hob is successfully connected to your home network.
5. You have 2 minutes to initiate the connection process on the extractor hood.

A message will be displayed to notify you when the hob is successfully connected to the extractor hood. The symbols for the hood controls on the hob are displayed in the settings area.

Note: Connection can only be established when both appliances are connected to your home network and the connection process has been initiated for both of them. If the time allowed for connecting has already expired for one of the two appliances, initiate the connection process again.

Resetting connection

You can reset the connections you have saved for your home network and extractor hood at any time.

1. Touch the ⚙ symbol in the docking menu to open the basic settings.
2. Touch the "Hood controls" setting.
3. Touch "Disconnect".

Control the hood via the hob

In the basic settings of your hob you can adjust the behaviour of your extractor hood depending on the switch-on/off of the hob or individual cooking zones.
→ *"Hood control settings" on page 46*

You can select other settings using the control panel.

Setting the fan

Switching on

Touch the symbol in the settings area.

Selecting a fan setting

Select the fan setting in the settings area.

You can choose between settings 1, 2 and 3. Touch **int 1** or **int 2** to select one of the intensive modes.

Switching off

Select fan setting 0.

Setting automatic mode

Switching on

1. Touch the symbol in the settings area.
2. Touch Auto in the settings area.
   Auto will be lit red.

The fan starts automatically when steam is generated.

Switching off

1. Touch the symbol in the settings area.
2. Touch Auto in the settings area.
   Auto will be lit white.

Setting the hood lighting

You can switch the hood light on and off via the hob's control panel.

Touch the symbol in the settings area.

Hood control settings

You can adapt the hood controls on the hob to suit your needs at any time.

Note: The settings will only be displayed if the appliance is connected to an extractor hood.

Setting	Description and options
Fan control (automatic start)	If you wish, you can set the fan to start up after the hob is switched on, and you can configure the settings depending on how you want the fan to run. ■ Off – The hood will need to be switched on manually if needed. ■ Switch on in automatic mode* – In automatic mode, the hood switches on when you switch on any of the cooking zones. ■ Switch on in standard mode – The hood is switched on at a fixed setting when you switch on any of the cooking zones.
Fan run-on	The fan run-on eliminates residual odours; the fan automatically switches off once this is complete. ■ Fan off. ■ Switch on in automatic mode.* ■ Switch on with standard fan run-on. ■ The fan settings cannot be adjusted when the hob is switched off.
Automatic light activation	If you wish, you can set the hood light to automatically come on when the hob is switched on. ■ Off ■ On* – The light switches on when you switch on the hob.
Automatic light deactivation	If you wish, you can set the hood light to automatically go out when the hob is switched off. ■ Off* ■ On – The light switches off when you switch off the hob.
Disconnect	You can reset the connections you have saved for your home network and extractor hood at any time.
* Default setting when delivered	

Cleaning

Suitable maintenance and cleaning products can be purchased from the after-sales service or in our e-Shop.

Hob

Cleaning

Always clean the hob after cooking. This will prevent food deposits from becoming burned on. Only clean the hob after the residual heat indicator has gone out.

Clean the hob with a damp dish cloth and dry it with a cloth or towel to prevent limescale build-up.

Only use cleaning agents that are suitable for this type of hob. Observe the manufacturer's instructions on the product packaging.

Never use:

- Undiluted washing-up liquid
- Cleaning agents designed for dishwashers
- Abrasive cleaners
- Harsh cleaning agents, such as oven spray and limescale remover
- Scouring pads
- High-pressure cleaners or steam jet cleaners

Stubborn dirt is best removed with a glass scraper, available from retailers. Observe the manufacturer's instructions.

You can obtain a suitable glass scraper from customer services or through our online shop.

Using a special sponge for cleaning glass-ceramic hobs achieves a great cleaning result.

Potential marks	
Limescale and water marks	Clean the hob as soon as it has cooled down. You can use a cleaning agent suitable for glass-ceramic hobs.*
Sugar, rice starch or plastic	Clean immediately. Use a glass scraper. Caution: Risk of burns.*
* Then clean with a damp dish cloth and dry with a cloth or towel.	

Note: Do not use any cleaning agents while the hob is still hot. This may mark the surface. Make sure that any residue left by cleaning agents is removed.

Hob surround

To prevent damage to the hob surround, observe the following instructions:

- Only use warm soapy water
- Wash new dish cloths thoroughly before use.
- Do not use harsh or abrasive cleaning agents.
- Do not use a glass scraper or sharp objects.

Frequently Asked Questions (FAQ)

Use

No image appears on the display panel.

The brightness may not be set correctly. Look at the display panel from above and set the brightness in the basic settings.
Further information on the settings can be found in the section entitled ⟶ *"Basic settings"*.

Noises

Why I can hear noises while I'm cooking?

Noises may be generated while using the hob depending on the base material of the cookware. These noises are a normal part of induction technology. They do not indicate a defect.

Possible noises:

A low humming noise like the one a transformer makes:

Occurs when cooking at a high heat setting. The noise disappears or becomes quieter when the heat setting is reduced.

Low whistling noise:

Occurs when the cookware is empty. This noise disappears when water or food is added to the cookware.

Crackling:

Occurs when using cookware made from different layers of material or when using cookware of different sizes and different materials at the same time. The loudness of the noise can vary depending on the quantity of food being cooked or the cooking method.

High-pitched whistling noises:

Can occur when two hotplates are used at the highest heat setting at the same time. The whistling noises disappear or become quieter when the heat setting is reduced.

Fan noise:

The hob is equipped with a fan that switches on automatically at high temperatures. The fan may continue to run even after you have switched off the hob if the temperature detected is still too high.

Cookware

Which types of cookware can be used with an induction hob?

You can find information on which types of cookware can be used with an induction hob in the section on ⟶ *"Induction cooking"*.

Why is the hotplate not heating up and why is the heat setting flashing?

The hotplate on which the cookware is standing is not switched on.
Check that you have switched on the correct hotplate.

The cookware is too small for the hotplate that is switched on or it is not suitable for induction cooking.
Check that the cookware is suitable for induction cooking and that it is placed on the hotplate that best corresponds to its size. You can find information on the type, size and positioning of cookware in the sections on ⟶ *"Induction cooking"*, ⟶ *"Flex Zone"* and ⟶ *"Move function"*.

Why is it taking so long for the cookware to heat up or why is it not heating up sufficiently despite being on a high heat setting?

The cookware is too small for the hotplate that is switched on or it is not suitable for induction cooking.
Check that the cookware is suitable for induction cooking and that it is placed on the hotplate that best corresponds to its size. You can find information on the type, size and positioning of cookware in the sections on ⟶ *"Induction cooking"*, ⟶ *"Flex Zone"* and ⟶ *"Move function"*.

Cleaning
How do I clean the hob? Using a special glass-ceramic cleaning agent produces the best results. We advise against using harsh or abrasive cleaning agents, dishwater detergent (concentrated) or scouring pads. You can find more information on cleaning and caring for your hob in the section on → *"Cleaning"*

Trouble shooting

Faults often have simple explanations. Please read the information and tips provided below before calling the after-sales service.

Information, warnings and fault messages

In the event of a problem, information, warnings or fault messages will automatically appear on the display.Follow the instructions on the touchscreen to rectify the problem.

Note: . A fault code will be displayed with some warnings.If a fault code is displayed, quote it when contacting the after-sales service.

Tips

Problem	Solution
The hob will not switch on.	Use other electrical appliances to check whether a short circuit has occurred in the power supply. Check that the appliance has been connected as shown in the circuit diagram. If the fault cannot be rectified, inform the technical after-sales service.
The touchscreen is not responding or is blocked.	The control panel is wet or an object is covering it. Dry the control panel or remove the object.
The cooking zone's power setting cannot be increased.	The hob's total power output has been limited. Alter the total power under Maximum power consumption in the basic settings. If a very large item of cookware is being used, this may have an effect on the maximum power setting for that half of the hob. Place the cookware back on the hob.
An audible signal sounds if there is an object on the touchscreen.	Remove the object and reset the hob. Do not place hot cookware on the control panel.
The hob responds in an unusual manner or cannot be operated properly.	Switch off the appliance using the mains fuse or the circuit breaker in the fuse box. Wait a few seconds before reconnecting the appliance.
The electronics have overheated and have switched off the corresponding cooking zone. The electronics have overheated and all the cooking zones have been switched off.	Wait until the electronics have cooled down sufficiently. When the fault code on the display goes out, you can resume cooking.
There is hot cookware in the vicinity of the control panel. To protect the electronics, the cooking zone has been switched off.	Remove the cookware. Wait a few seconds. When the fault code on the display goes out, you can resume cooking.
The cooking zone has overheated and has been switched off to protect your work surface.	Wait until the electronics have cooled down sufficiently before switching the cooking zone on again.
The transfer settings function cannot be activated.	Touch any touch control to check the fault code. You can cook as usual without using the transfer settings function. Contact the technical after-sales service.
The cooking zone has been operating continuously for an extended period.	The automatic safety switch-off function has been activated. See the section entitled

Problem	Solution
The temperature sensor has overheated and the cooking zone has been switched off. E8202	Wait until the temperature sensor has cooled down sufficiently before activating the function again.
The temperature sensor has overheated and all the cooking zones have been switched off. E8203	If you are not using the temperature sensor, remove it from the cookware and keep it away from the other cooking zones and sources of heat. Switch the cooking zones on again.
The battery in the temperature sensor is very low. E8204	Replace the 3 V CR2032 battery. See the section entitled ⟶ *"Changing the battery"*
The connection to the temperature sensor has been broken. E8205	Switch the function off and then on again.
The temperature sensor is broken/faulty. E8206	Contact the technical after-sales service.
The temperature sensor indicator does not light up and the temperature sensor is not responding.	Replace the 3 V CR2032 battery. See the section entitled ⟶ *"Changing the battery"* If this does not solve the problem, press and hold the symbol on the temperature sensor for 8-10 seconds and then reconnect the temperature sensor to the hob. See the section entitled If the problem persists, contact the technical after-sales service.
The indicator on the sensor flashes twice. The battery in the temperature sensor is very low. You may be interrupted the next time you cook by the battery running out.	Replace the 3 V CR2032 battery. See the section entitled ⟶ *"Changing the battery"*
The indicator on the sensor flashes three times. The connection to the temperature sensor has been broken.	Press and hold the symbol on the temperature sensor for 8-10 seconds and then reconnect the temperature sensor to the hob. See the section entitled ⟶ *"Connecting the wireless temperature sensor to the control panel"*
The operating voltage is incorrect/outside of the normal operating range. E9000/E9010	Contact your energy supplier.
The hob is not connected properly U400	Disconnect the hob from the power supply. Check that it has been connected as shown in the circuit diagram.

Demo mode

If the DEMO MODE symbol is shown on the display, demo mode is active. The appliance does not heat up in demo mode. Disconnect the appliance from the power supply.Wait a few seconds before reconnecting the appliance. Then deactivate demo mode in the basic settings within 3 minutes of switching on the appliance.

Customer service

Our after-sales service is there for you if your appliance needs to be repaired. We will always find an appropriate solution, also in order to avoid after-sales personnel having to make unnecessary visits.

E number and FD number

Please quote the E number (product number) and FD number (production number) of your appliance when contacting the after-sales service.

The rating plate bearing these numbers can be found:

- On the appliance certificate.
- On the underside of the hob.

The E number can also be found on the hob's glass ceramic surface. You can check the E number, after-sales service index (KI) and FD number by going to the basic settings.Refer to the section entitled → *"Basic settings"* to find out how to do this.

Please note that a visit from an after-sales service engineer is not free of charge in the event that the appliance has been misused, even during the warranty period.

Please find the contact data of all countries in the enclosed customer service list.

To book an engineer visit and product advice

GB 0344 892 8999
Calls charged at local or mobile rate.

IE 01450 2655
0.03 € per minute at peak. Off peak 0.0088 € per minute.

Rely on the professionalism of the manufacturer. You can therefore be sure that the repair is carried out by trained service technicians who carry original spare parts for your appliances.

Test dishes

This table has been produced for test institutes to facilitate the testing of our appliances.

The data in the table refers to our Schulte-Ufer cookware accessories (4 piece cookware set for the HZ 390042 induction hob) with the following measurements:

- Saucepan Ø 16 cm, 1.2 l for hotplates of Ø 14.5 cm
- Pot Ø 16 cm, 1.7 l for hotplates of Ø 14.5 cm
- Pot Ø 22 cm, 4.2 l for hotplates of Ø 18 cm
- Frying pan Ø 24 cm, for hotplates of Ø 18 cm

		Preheating			Cooking	
Test dishes	**Cookware**	**Heat setting**	**Cooking time (min:sec)**	**Lid**	**Heat setting**	**Lid**
Melting chocolate						
Chocolate coating (e.g. Dr. Oetker brand, dark chocolate 55% cocoa, 150 g)	Saucepan, 16 cm diameter	-	-	-	1.5	No
Heating and keeping lentil stew warm						
Lentil stew* Initial temperature 20 °C						
Amount: 450 g	Cooking pot, 16 cm diameter	9	1:30 (without stirring)	Yes	1.5	Yes
Amount: 800 g	Saucepan, 22 cm diameter	9	2:30 (without stirring)	Yes	1.5	Yes
Lentil stew from a tin E.g lentils with Erasco sausages. Initial temperature 20 °C						
Amount: 500 g	Cooking pot, 16 cm diameter	9	Approx. 1:30 (stir after approx. 1 minute)	Yes	1.5	Yes
Amount: 1 kg	Saucepan, 22 cm diameter	9	Approx. 2:30 (stir after approx. 1 minute)	Yes	1.5	Yes
Preparing Béchamel sauce						
Temperature of the milk: 7 °C Ingredients: 40 g butter, 40 g flour, 0.5 l milk (3.5% fat content) and a pinch of salt						
1. Melt the butter, stir in the flour and salt, and heat up the mixture.	Saucepan, 16 cm diameter	2	Approx. 6:00	No	-	-
2 Add the milk to the roux and bring to the boil, stirring continuously.		7	Approx. 6:30	No	-	-
3. Once the Béchamel sauce comes to the boil, leave it on the hotplate for a further two minutes, stirring continuously.		-	-	-	2	No

*Recipe in accordance with DIN 44550

**Recipe in accordance with DIN EN 60350-2

Test dishes	Cookware	Heat setting	Preheating Cooking time (min:sec)	Lid	Cooking Heat setting	Lid
Cooking rice pudding Rice pudding, cooked with the lid on Temperature of the milk: 7 °C Heat the milk until it starts to rise up. Set the recommended heat setting and add rice, sugar and salt to the milk. The cooking time, including preheating, is approx. 45 minutes.						
Ingredients: 190 g short-grain rice, 90 g sugar, 750 ml milk (3.5% fat content) and 1 g salt	Cooking pot, 16 cm diameter	8.5	Approx. 5:30	No	3 (stir after 10 minutes)	Yes
Ingredients: 250 g short-grain rice, 120 g sugar, 1 l milk (3.5% fat content) and 1.5 g salt	Saucepan, 22 cm diameter	8.5	Approx. 5:30	No	3 (stir after 10 minutes)	Yes
Rice pudding, cooked without lid Temperature of the milk: 7 °C Add the ingredients to the milk and heat the mixture up while stirring continuously. Once the milk has reached approx. 90 °C, select the recommended heat setting and leave it to simmer on a low heat for approx. 50 minutes.						
Ingredients: 190 g short-grain rice, 90 g sugar, 750 ml milk (3.5% fat content) and 1 g salt	Cooking pot, 16 cm diameter	8.5	Approx. 5:30	No	3	No
Ingredients: 250 g short-grain rice, 120 g sugar, 1 l milk (3.5% fat content) and 1.5 g salt	Saucepan, 22 cm diameter	8.5	Approx. 5:30	No	2.5	No
Cooking rice* Water temperature: 20 °C						
Ingredients: 125 g long grain rice, 300 g water and a pinch of salt	Cooking pot, 16 cm diameter	9	Approx. 2:30	Yes	2	Yes
Ingredients: 250 g long grain rice, 600 g water and a pinch of salt	Saucepan, 22 cm diameter	9	Approx. 2:30	Yes	2.5	Yes
Roasting a pork loin Initial temperature of the loin: 7 °C						
Amount: 3 pork loins (total weight approx. 300 g, 1 cm thick) and 15 ml sunflower oil	Frying pan, 24 cm diameter	9	Approx. 1:30	No	7	No
Preparing pancakes** Amount: 55 ml batter for each pancake	Frying pan, 24 cm diameter	9	Approx. 1:30	No	7	No
Deep-fat frying chips Amount: 1.8 l sunflower oil, per portion: 200 g frozen chips (e.g. McCain 123 Original fries)	Saucepan, 22 cm diameter	9	Until the oil temperature reaches 180 °C	No	9	No

*Recipe in accordance with DIN 44550

**Recipe in accordance with DIN EN 60350-2

BSH Hausgeräte GmbH
Carl-Wery-Str. 34, 81739 München
GERMANY

siemens-home.bsh-group.com

Manufactured by BSH Hausgeräte GmbH under Trademark License of Siemens AG

9001294671
970613(00)