BOSCH

Register your new device on MyBosch now and get free benefits:
bosch-home.com/welcome

MyBosch

Induction hob with integrated ventilation system

PXX...D6..

[en] Instruction manual Hob

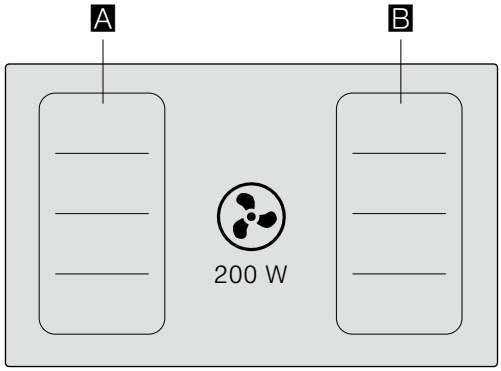

		9*	b*
A / B		2.200 W	3.700 W
		3.300 W	3.700 W

* IEC 60335-2-6

Ø = cm

Table of contents

Intended use . . . 5

Important safety information . . . 6

Causes of damage . . . 8

Environmental protection . . . 8
Energy saving tips . . . 8
Environmentally-friendly disposal . . . 8

Induction cooking . . . 9
Advantages of induction cooking . . . 9
Cookware . . . 9

Getting to know your appliance . . . 11
Your new appliance . . . 11
Special accessories . . . 11
The control panel . . . 12
The hotplates . . . 13
Residual heat indicator . . . 13

Operating modes . . . 14
Exhaust air mode . . . 14
Circulating-air mode . . . 14

Before using for the first time . . . 14
Setting Home Connect . . . 14
Setting the operating mode . . . 14

Operating the appliance . . . 15
Switching the hob on and off . . . 15
Setting a hotplate . . . 15
Chef's recommendations . . . 16
Manual hood control . . . 18
Intensive setting . . . 18
Automatic start . . . 18
Automatic mode with sensor control . . . 18
Run-on function . . . 18

Flex Zone . . . 19
Advice on using cookware . . . 19
As two independent hotplates . . . 19
As a single hotplate . . . 19

Move function . . . 20
Activation . . . 20
Deactivating . . . 20

Time-setting options . . . 21
Programming the cooking time . . . 21
The kitchen timer . . . 21
Stopwatch function . . . 22

PowerBoost function . . . 22
Activating . . . 22
Deactivating . . . 22

ShortBoost function . . . 23
Recommendations for use . . . 23
Activating . . . 23
Deactivating . . . 23

Keep warm function . . . 23
Activating . . . 23
Deactivating . . . 23

Transferring settings . . . 24
Activation . . . 24

Cooking assist functions . . . 25
Cooking assistant function types . . . 25
Suitable cookware . . . 26
Sensors and special accessories . . . 26
Functions and heat settings . . . 26
Recommended dishes . . . 30
Teppan Yaki and Grill for the Flex Zone . . . 38

Wireless temperature sensor . . . 40
Preparing and maintaining the wireless temperature sensor . . . 40
Connecting the wireless temperature sensor to the control panel . . . 40
Cleaning . . . 41
Changing the battery . . . 41
Declaration of Conformity . . . 42

Childproof lock . . . 42
Activating and deactivating the childproof lock . . . 42
Childproof lock . . . 42

Wipe protection . . . 43

Automatic safety cut-out . . . 43

Basic settings . . . 44
To access the basic settings: . . . 46

Energy consumption indicator 46

Cookware check. 47

Power manager 47

Home Connect 48
Setting up. 48
Home Connect settings 49
Software update 51
Remote diagnostics 51
About data protection. 52
Declaration of Conformity. 52

Cleaning 52
Cleaning agents 52
Components to clean. 53
Hob surround (only on appliances with hob surrounds) 53
Hob 54
Ventilation system 54
Cleaning the overflow container 56

Frequently Asked Questions (FAQ) 57

Trouble shooting 59

Customer service. 61
Product number (E no.) and production number (FD no.) 61

Test dishes 62

Additional information on products, accessories, replacement parts and services can be found at **www.bosch-home.com** and in the online shop **www.bosch-eshop.com**

Intended use

Read these instructions carefully. Please keep the instruction and installation manual, as well as the appliance certificate, in a safe place for later use or for subsequent owners.

Check the appliance after removing it from the packaging. If it has suffered any damage in transport, do not connect the appliance, contact the Technical Assistance Service and provide written notification of the damage caused, otherwise you will lose your right to any type of compensation.

Only a licensed professional may connect appliances without plugs. Damage caused by incorrect connection is not covered under warranty.

This appliance must be installed according to the installation instructions included.

This appliance is intended for private domestic use and the household environment only. The appliance must only be used for the preparation of food and beverages. The cooking process must be supervised. A short cooking process must be supervised without interruption. Only use the appliance in enclosed spaces.

This appliance is intended for use up to a maximum height of 2000 metres above sea level.

Do not use covers. These can cause accidents, for example due to overheating, catching fire or materials shattering.

Only use safety devices or child protection grilles approved by ourselves. Unsuitable safety devices or child protection grilles may result in accidents.

This appliance is not intended for operation with an external clock timer or a remote control.

Dangerous or explosive materials and vapours must not be extracted.

Ensure that no small parts or liquids get into the appliance.

This appliance may be used by children over the age of 8 years old and by persons with reduced physical, sensory or mental capabilities or by persons with a lack of experience or knowledge if they are supervised or are instructed by a person responsible for their safety how to use the appliance safely and have understood the associated hazards.

Children must not play with, on, or around the appliance. Children must not clean the appliance or carry out general maintenance unless they are at least 15 years old and are being supervised.

Keep children below the age of 8 years old at a safe distance from the appliance and power cable.

When using the cooking functions, set the hotplate on which you have placed the saucepan with the temperature sensor.

If you wear an active implantable medical device (e.g. a pacemaker or defibrillator), check with your doctor that it complies with Council Directive 90/385/EEC of 20th June 1990, DIN EN 45502-2-1 and DIN EN 45502-2-2, and that it has been chosen, implanted and programmed in accordance with VDE-AR-E 2750-10. If these conditions are satisfied, and if, in addition, non-metal cooking utensils and cookware with non-metal handles are used, it is safe to use this induction hob as intended.

Important safety information

Warning – Danger of suffocation!
Packaging material is dangerous to children. Never allow children to play with packaging material.

Warning – Danger of death!
Risk of poisoning from flue gases being drawn back in.
Always ensure that there is an adequate supply of fresh air to the room if the appliance is being operated in air extraction mode at the same time as a non-room-sealed heating appliance is being operated.

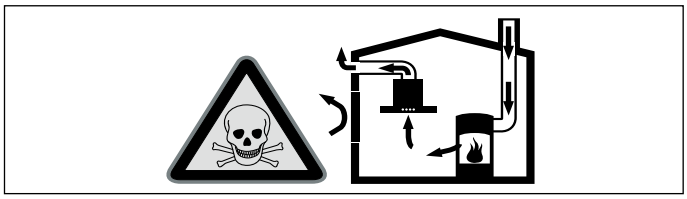

Non-room-sealed heating appliances (e.g. gas-, oil-, wood- or coal-burning heaters, continuous flow heaters or water heaters) draw in combustion air from the room in which they are installed and discharge the exhaust gases outdoors through an exhaust gas system (e.g. a chimney).
With the extractor hood switched on, air is extracted from the kitchen and the adjacent rooms – without an adequate supply of air, the air pressure falls below atmospheric pressure. Toxic gases from the chimney or the extraction shaft are sucked backed into the living space.

- There must therefore always be an adequate supply of air.
- A supply-air/air-extraction duct alone is not sufficient to ensure compliance with the limit.

It is only possible to safely operate the appliance if the pressure in the room in which the heating appliance is installed does not drop more than 4 Pa (0.04 mbar) below atmospheric pressure. This can be achieved if the air needed for combustion is able to enter through openings that cannot be sealed, for example through doors, windows, by means of a supply-air/air-extraction duct or by other technical means.

The exhaust air must not be conveyed into a functioning smoke or exhaust gas flue or into a shaft that is used to ventilate rooms in which heating appliances are installed.
If the exhaust air is to be conveyed into a non-functioning smoke or exhaust gas flue, you must obtain the consent of the heating engineer responsible.

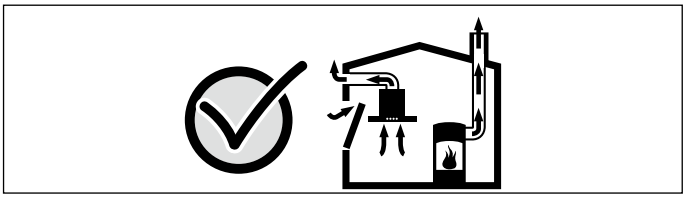

Always consult the heating engineer responsible. They will be able to assess the house's entire ventilation setup and suggest the most appropriate ventilation measures. Unrestricted operation is possible if the extractor hood is operated exclusively in air recirculation mode.

Warning – Risk of fire!

- Hot oil and fat can ignite very quickly. Never leave hot fat or oil unattended. Never use water to put out burning oil or fat. Switch off the hotplate. Extinguish flames carefully using a lid, fire blanket or something similar.
- The hotplates become very hot. Never place combustible items on the hob. Never place objects on the hob.
- The appliance gets hot. Do not keep combustible objects or aerosol cans in drawers directly underneath the hob.
- The hob switches off automatically and can no longer be operated. It may switch on unintentionally at a later point. Switch off the circuit breaker in the fuse box. Contact the after-sales service.
- Fatty deposits in the grease filter may catch fire. Regularly clean the grease filter. Never operate the appliance without a grease filter.
- When the ventilation system is switched on, fatty deposits in the grease filter may catch fire. Never work with naked flames close to the appliance (e.g. flambéing). Do not install the appliance near a solid fuel heating appliance (e.g. wood- or coal-burning) unless a sealed, non-removable cover is fitted. There must be no flying sparks.

⚠ Warning – Risk of burns!

- The hotplates and surrounding area (particularly the hob surround, if fitted) become very hot. Never touch the hot surfaces. Keep children at a safe distance.
- The hotplate heats up but the display does not work. Switch off the circuit breaker in the fuse box. Contact the after-sales service.
- Metal objects on the hob quickly become very hot. Never place metal objects (such as knives, forks, spoons and lids) on the hob.
- After each use, always turn off the hob at the main switch. Do not wait until the hob turns off automatically after the pan is removed.
- The accessible parts become very hot when in operation. Never touch hot parts. Keep children at a safe distance.
- The appliance becomes hot during operation. If hot liquids penetrate the appliance, leave the appliance to cool before removing the metal grease filter or the overflow container.

⚠ Warning – Risk of electric shock!

- Incorrect repairs are dangerous. Repairs may only be carried out and damaged power cables replaced by one of our trained after-sales technicians. If the appliance is defective, unplug the appliance from the mains or switch off the circuit breaker in the fuse box. Contact the after-sales service.
- Do not use any high-pressure cleaners or steam cleaners, which can result in an electric shock.
- A defective appliance may cause electric shock. Never switch on a defective appliance. Unplug the appliance from the mains or switch off the circuit breaker in the fuse box. Contact the after-sales service.
- Cracks or fractures in the glass ceramic may cause electric shocks. Switch off the circuit breaker in the fuse box. Contact the after-sales service.

⚠ Warning – Hazard due to magnetism!

The wireless temperature sensor is magnetic. The magnetic elements in it may damage electronic implants, e.g. pacemakers or insulin pumps. People fitted with electronic implants should therefore not carry the temperature sensor in their pockets and always keep it at least 10 cm away from their pacemaker or similar medical device.

⚠ Warning – Risk of injury!

- The wireless cooking sensor is equipped with a battery, which may become damaged if it is exposed to high temperatures. Remove the sensor from the cookware and store it away from any heat sources.
- The temperature sensor may be very hot when removing it from the saucepan. Wear oven gloves or use a tea towel to remove it.
- When cooking in a bain marie, the hob and cooking container could shatter due to overheating. The cooking container in the bain marie must not directly touch the bottom of the water-filled pot. Only use heat-resistant cookware.
- Saucepans may suddenly jump due to liquid between the pan base and the hotplate. Always keep the hotplate and saucepan bases dry.

Causes of damage

Caution!

- Rough pan bases may scratch the hob.
- Objects that are hard or sharp may damage the hob. Do not allow hard or sharp objects to fall on the hob.
- Heating cookware when empty may cause surface damage. Never leave empty cookware on the heat.
- Do not place hot pans on the control panel, the indicator area, or the hob frame. Doing so may cause damage.
- Never leave aluminium foil or plastic containers on hot hotplates as this may damage the hob. No not use oven liners.
- Using unsuitable cleaning products may cause surface damage, discolouration and stains. Only use cleaning products that are suitable for this type of hob.
- Friction from pots and pans may cause surface damage and discolouration. Always lift pots and pans up before repositioning them; do not slide them across the surface of the hob.
- Burnt-on food may cause surface damage and staining. Immediately remove any food that has boiled over using a glass scraper.
- Salt, sugar and sand may cause surface damage. Do not use the hob as a work surface or storage space.
- Using cookware with a rough base may cause surface damage. Check all cookware before use.
- Sugar and foods with a high sugar content may cause surface damage or conchoidal fracturing. Immediately remove any food that has boiled over using a glass scraper.

Environmental protection

In this section, you can find information about saving energy and disposing of the appliance.

Energy saving tips

- Always use a matching lid for every item of cookware. Cooking without a lid consumes significantly more energy. Use a glass lid. Then you can see into the pan without raising the lid.
- Use cookware with a flat base. Uneven bases increase the energy consumption.
- Make sure that the diameter of the cookware base corresponds to the size of the cooking zone. Please note: Cookware manufacturers often specify the diameter of the top of the pan, which is usually larger than the diameter of the base of the pan.
- For small quantities, use small items of cookware. Using cookware that is large but barely filled requires a lot of energy.
- Cook with as little water as possible. This saves energy and preserves the vitamins and minerals in vegetables.
- Switch to a lower heat setting in good time. This prevents energy from being wasted.
- During cooking, ensure that there is a sufficient supply of air to enable the ventilation system to work efficiently and with a low level of operating noise.
- Adjust the fan speed to the amount of cooking vapour produced during cooking.Only use the intensive setting if needed. A lower fan speed consumes less energy.
- If cooking produces large amounts of vapour, select a higher fan speed in good time. If the cooking vapour has already spread around the kitchen, the ventilation system will need to be operated for longer.
- Switch the appliance off when you are not using it.
- Clean and (if required) replace the filter at regular intervals in order to increase the effectiveness of the ventilation system and to prevent the risk of fire.

Environmentally-friendly disposal

Dispose of packaging in an environmentally-friendly manner.

This appliance is labelled in accordance with European Directive 2012/19/EU concerning used electrical and electronic appliances (waste electrical and electronic equipment - WEEE). The guideline determines the framework for the return and recycling of used appliances as applicable throughout the EU.

The wireless temperature sensor is battery-powered. Dispose of used batteries in an environmentally responsible manner.

Induction cooking

Advantages of induction cooking

Induction cooking is very different from traditional cooking methods, as heat builds up directly in the item of cookware. This offers numerous advantages:

- Saves time when boiling and frying.
- Saves energy.
- Easier to care for and clean. Spilled food does not burn on as quickly.
- Heat control and safety – the hob increases or decreases the heat supply as soon as the user changes the setting. The induction hotplate stops the heat supply as soon as the cookware is removed from the hotplate, without having to switch it off first.

Cookware

Only use ferromagnetic cookware for induction cooking, such as:

- Cookware made from enamelled steel
- Cookware made from cast iron
- Special induction-compatible cookware made from stainless steel.

To check whether your cookware is suitable for induction cooking, refer to the section on → *"Cookware check"*.

To achieve a good cooking result, the ferromagnetic area on the base of the pan should match the size of the hotplate. If a hotplate does not detect an item of cookware, try placing it on another hotplate with a smaller diameter.

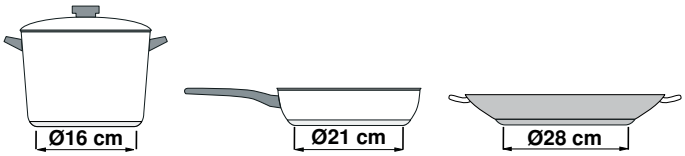

If the only hotplate being used is the flexible cooking zone, larger cookware that is particularly suited to this zone can be used. You can find information on positioning cookware in the section on → *"Flex Zone"*.

Some induction cookware does not have a fully ferromagnetic base:

- If the base of the cookware is only partially ferromagnetic, only the area that is ferromagnetic will heat up. This may mean that heat will not be distributed evenly. The non-ferromagnetic area may not heat up to a sufficient temperature for cooking.

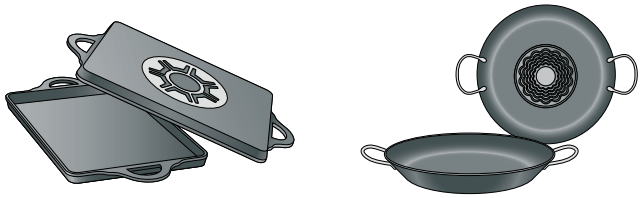

- The ferromagnetic area will also be reduced if the material from which the base of the cookware is made contains aluminium, for example. This may mean that the cookware will not become sufficiently hot or even that it will not be detected.

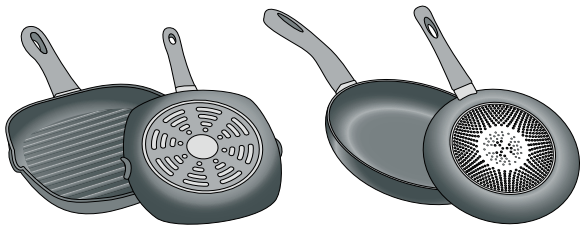

Unsuitable pans

Never use diffuser hobs or pans made from:

- common thin steel
- glass
- earthenware
- copper
- aluminium

Properties of the base of the cookware

The material(s) from which the base of the cookware is made can affect the cooking result. Using pots and pans made from materials that distribute heat evenly through them, such as stainless-steel pans with a three-layer base, saves time and energy.

Use cookware with a flat base; if the base of the cookware is uneven, this may impair the heat supply.

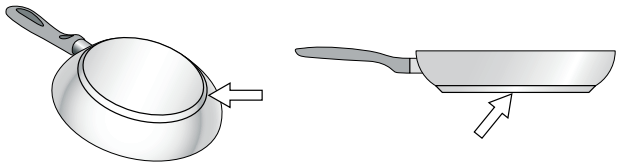

Absence of pan or unsuitable size

If no pan is placed on the selected hotplate, or if it is made of unsuitable material or is not the correct size, the power level displayed on the hotplate indicator will flash. Place a suitable pan on the hotplate to stop the flashing. If this takes more than 90 seconds, the hotplate will switch off automatically.

Empty pans or those with a thin base

Do not heat empty pans, nor use pans with a thin base. The hob is equipped with an internal safety system. However, an empty pan may heat up so quickly that the "automatic switch off" function may not have time to react and the pan may reach very high temperatures. The base of the pan could melt and damage the glass on the hob. In this case, do not touch the pan and switch the hotplate off. If it fails to work after it has cooled down, please contact the Technical Assistance Service.

Pan detection

Each hotplate has a lower limit for pan detection. This depends on the diameter of the ferromagnetic area of the cookware and the material from which its base is made. For this reason, you should always use the hotplate that best matches the diameter of the base of the pan.

Getting to know your appliance

You can find information on the dimensions and power of the hotplates in→ *Page 2*

Note: Depending on the appliance model, individual details and colours may differ.

Your new appliance

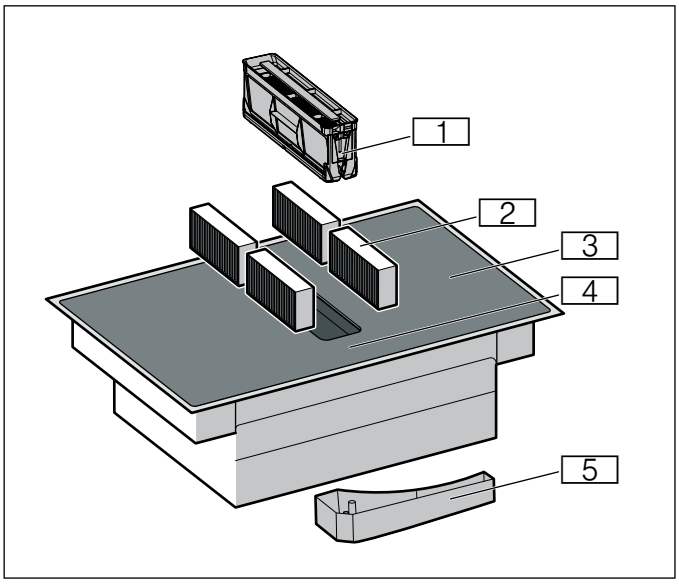

No.	Designation
1	Metal grease filter
2	Activated charcoal filter for air recirculation or acoustics filter for air extraction*
3	Hob
4	Control panel
5	Overflow container

*Depending on the appliance specifications

Special accessories

Depending on the appliance model, various accessories are available and you can obtain these from specialist retailers, from our after-sales service or from our official website:

- Air extraction set
- Air recirculation set
- Activated charcoal filter: For air circulation
- Acoustics filter: For air extraction mode

The control panel

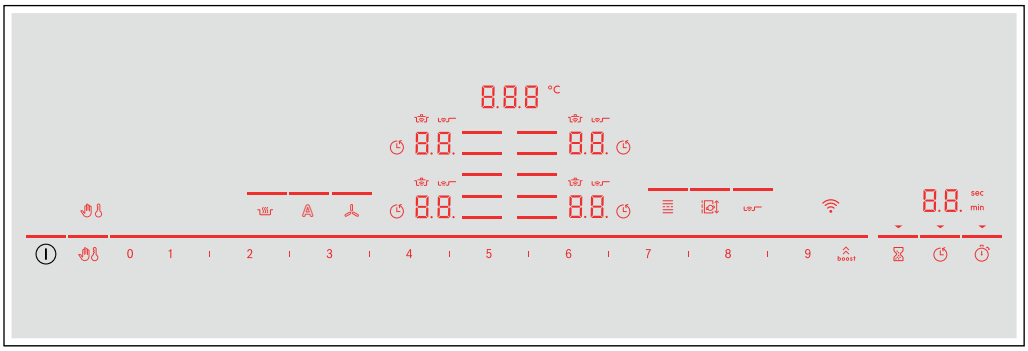

Selection sensors	
	Main switch
	Selecting the cooking zone
0 1 2 ... 8 9	Settings area
boost	PowerBoost and ShortBoost functions Intensive ventilation settings
	Locking the control panel for cleaning
	Childproof lock
	Keep-warm function
	Frying sensor
	FlexZone
	Move function
	Timer
	Cooking timer
	Stopwatch function
	Wi-Fi
	Manual hood control
	Sensor hood control

Display	
0.0	Operating status
1-9	Power levels
H/h	Residual heat
00	Time-setting options
000 °C	Temperature for cooking functions
	Locking the control panel for cleaning
	Childproof lock
	Cooking timer
min/sec	Timer displays
b.	PowerBoost function
Pb.	ShortBoost function
	Cooking functions
	Frying sensor
t	Transferring settings
Lo	Keep-warm function
	Wi-Fi

Controls

When the hob heats up, the symbols for the controls available at this time light up.

Touching a symbol activates the respective function.

Notes

- The corresponding symbols for the controls light up depending on whether they are available.
  The displays for the hotplates or the selected functions get brighter.
- Always keep the control panel clean and dry. Moisture can prevent it from working properly.
- Do not place any cookware near the indicators or sensors. The electronics could overheat.

The hotplates

Hotplate		
	Simple hotplate	Use cookware that is a suitable size
	Flexible cooking zone	See section ⟶ *"Flex Zone"*
Only use cookware that is suitable for induction cooking; see section ⟶ *"Induction cooking"*		

Residual heat indicator

The hob has a residual heat indicator for each hotplate. This indicates that a hotplate is still hot. Do not touch a hotplate while the residual heat indicator is lit up.

The following indicators are shown depending on the amount of residual heat:

- Display H: High temperature
- Display h: Low temperature

If you remove the cookware from the hotplate during cooking, the residual heat indicator and the selected heat setting will flash alternately.

When the hotplate is switched off, the residual heat indicator will light up. Even after the hob has been switched off, the residual heat indicator will stay lit for as long as the hotplate is still warm.

Operating modes

This appliance can be used in air extraction mode or circulating-air mode.

Exhaust air mode

The air which is drawn in is cleaned by the grease filters and conveyed to the exterior by a pipe system.

Note: The exhaust air must not be conveyed into a functioning smoke or exhaust gas flue or into a shaft which is used to ventilate installation rooms which contain heat-producing appliances.

- Before conveying the exhaust air into a non-functioning smoke or exhaust gas flue, obtain the consent of the heating engineer responsible.
- If the exhaust air is conveyed through the outer wall, a telescopic wall box should be used.

Circulating-air mode

The air which is drawn in is cleaned by the grease filters and an activated carbon filter and conveyed back into the kitchen.

Note: To bind odours in circulating-air mode, you must install an activated carbon filter. The different options for operating the appliance in circulating-air mode can be found in the brochure. Alternatively, ask your dealer. The required accessories are available from specialist outlets, from customer service or from the Online Shop.

Before using for the first time

Please read the following information before using the appliance for the first time:

Clean the appliance and all accessory parts thoroughly.

Before you can use your new appliance, you must apply certain settings.

Switch the hob on and off using the main switch ⏻.

Setting Home Connect

When you first switch on the appliance, you will be prompted to set up your home network. The symbol will be lit dimly for a few seconds on the display panel. To begin setting up the connection, touch the sensor and proceed in accordance with the information given in the section entitled → *"Home Connect"*.To exit initial set-up, touch any sensor.

Setting the operating mode

The appliance is supplied with a preset air recirculation mode.

When the hob is installed with an air outlet to the outside, you must configure the setting c 17 in this mode. See section → *"Basic settings"*.

Operating the appliance

This chapter explains how to set a hotplate. The table shows heat settings and cooking times for various meals.

Tip: Switch on the ventilation system when you start cooking and only switch it off a few minutes after you have finished cooking. This is the most effective way to remove the cooking vapours.

Note: Never operate the appliance without the metal grease filter and the overflow container.

Switching the hob on and off

The main switch is used to switch the hob on and off.

To switch on: Touch the ⏻ symbol. An audible signal sounds. The symbols for the hotplates and the functions available at this time light up. The 0.0 symbol lights up next to the hotplates. The hob is ready to use.

To switch off: Touch the ⏻ symbol until the indicators go out. The residual heat indicator remains lit until the hotplates have cooled down sufficiently.

Notes

- If the appliance has not been connected to your home network or the connection has been broken, network connection initial set-up will be activated whenever you switch on the hob.
- The hob will automatically switch itself off if the cooking zones have been switched off for a few seconds.
- The settings are stored for 4 seconds after the hob has been switched off. If you switch the hob back on during this time, the hob will operate using the stored settings.

Setting a hotplate

Set the required heat setting using the 1 to 9 symbols.

Heat setting 1 = lowest setting.

Heat setting 9 = highest setting.

Every heat setting has an intermediate setting. This is marked in the control panel with the ı symbol.

Notes

- To protect the fragile parts of your appliance from overheating and electrical overloading, the hob may temporarily reduce the power.
- In order to prevent the appliance from producing excess noise, the hob may temporarily reduce the power.

Selecting a hotplate and heat setting

The hob must be switched on.

1. Touch the ☰ symbol for the required hotplate. The 0.0 display gets brighter.
2. Then select the required heat setting from the settings range.

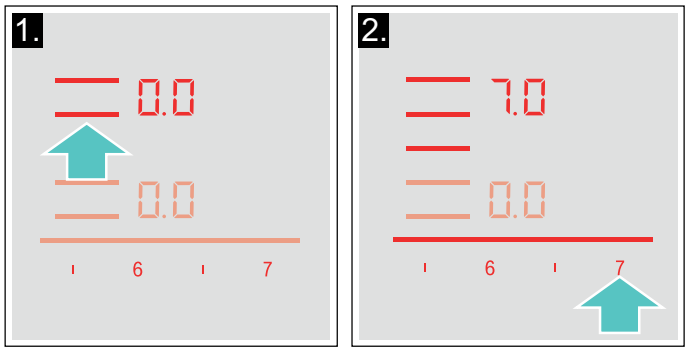

The heat setting is set.

Note: When you place a pot or pan on the Flex Zone, the hob detects it and the hob is selected automatically. You will find more information about the Flex Zone in the section entitled → *"Flex Zone"*.

Changing the heat setting

Select the hotplate and then set the required heat setting in the control panel.

Switching off the hotplate

Select the hotplate and set it to 0.0 in the settings range. The hotplate switches itself off and the residual heat indicator appears.

Notes

- If no pan has been placed on the hotplate, the selected power level flashes. After a certain time has elapsed, the hotplate switches off.
- If a pan has been placed on the hotplate before switching on the hob, it will be detected within 20 seconds of pressing the main switch and the hotplate will be selected automatically. Once detected, select the power level within the next 20 seconds or the hotplate will switch off.
  If more than one pan is placed on the hob, only one will be detected when switching it on.

Chef's recommendations

Recommendations

- When heating up puree, cream soups and thick sauces, stir occasionally.
- Set heat setting 8 to 9 for preheating.
- When cooking with the lid on, turn the heat setting down as soon as steam escapes between the lid and the cookware. Steam does not need to escape for a good cooking result.
- After cooking, keep the lid on the cookware until you serve the food.
- To cook with the pressure cooker, observe the manufacturer's instructions.
- Do not cook food for too long, otherwise the nutrients will be lost. The kitchen clock can be used to set the optimum cooking time.
- For a more healthy cooking result, smoking oil should be avoided.
- To brown food, fry small portions in succession.
- Cookware may reach high temperatures while the food is cooking. We recommend that you use oven gloves.
- You can find recommendations for energy-efficient cooking in section ⟶ *"Environmental protection"*

Cooking table

The table shows which heat setting is suitable for each type of food. The cooking time may vary depending on the type, weight, thickness and quality of the food.

	Heat setting	Cooking time (mins)
Melting		
Chocolate coating	1 - 1.5	-
Butter, honey, gelatine	1 - 2	-
Heating and keeping warm		
Stew, e.g. lentil stew	1.5 - 2	-
Milk*	1.5 - 2.5	-
Heating sausages in water*	3 - 4	-
Defrosting and heating		
Spinach, frozen	3 - 4	15 - 25
Goulash, frozen	3 - 4	35 - 55
Poaching, simmering		
Potato dumplings*	4.5 - 5.5	20 - 30
Fish*	4 - 5	10 - 15
White sauces, e.g. Béchamel sauce	1 - 2	3 - 6
Whisked sauces, e.g. sauce béarnaise, hollandaise	3 - 4	8 - 12

* Without lid
** Turn several times
*** Preheat to heat setting 8 - 8.5

	Heat setting	Cooking time (mins)
Boiling, steaming, braising		
Rice (with double the volume of water)	2.5 - 3.5	15 - 30
Rice pudding***	2 - 3	30 - 40
Unpeeled boiled potatoes	4.5 - 5.5	25 - 35
Boiled potatoes	4.5 - 5.5	15 - 30
Pasta, noodles*	6 - 7	6 - 10
Stew	3.5 - 4.5	120 - 180
Soups	3.5 - 4.5	15 - 60
Vegetables	2.5 - 3.5	10 - 20
Vegetables, frozen	3.5 - 4.5	7 - 20
Cooking in a pressure cooker	4.5 - 5.5	-
Braising		
Roulades	4 - 5	50 - 65
Pot roast	4 - 5	60 - 100
Goulash***	3 - 4	50 - 60
Roasting/frying with little oil*		
Escalope, plain or breaded	6 - 7	6 - 10
Escalope, frozen	6 - 7	6 - 12
Chop, plain or breaded**	6 - 7	8 - 12
Steak (3 cm thick)	7 - 8	8 - 12
Poultry breast (2 cm thick)**	5 - 6	10 - 20
Poultry breast, frozen**	5 - 6	10 - 30
Rissoles (3 cm thick)**	4.5 - 5.5	20 - 30
Hamburgers (2 cm thick)**	6 - 7	10 - 20
Fish and fish fillet, plain	5 - 6	8 - 20
Fish and fish fillet, breaded	6 - 7	8 - 20
Fish, breaded and frozen, e.g. fish fingers	6 - 7	8 - 15
Scampi, prawns	7 - 8	4 - 10
Sautéeing fresh vegetables and mushrooms	7 - 8	10 - 20
Stir-fry, vegetables, meat cut in Asian-style strips	7 - 8	15 - 20
Stir fry, frozen	6 - 7	6 - 10
Pancakes (baked in succession)	6.5 - 7.5	-
Omelette (cooked in succession)	3.5 - 4.5	3 - 10
Fried eggs	5 - 6	3 - 6
Deep-fat frying* (150-200 g per portion in 1-2 l oil, deep-fat fried in portions)		
Frozen products, e.g. chips, chicken nuggets	8 - 9	-
Croquettes, frozen	7 - 8	-
Meat, e.g. chicken portions	6 - 7	-
Fish, breaded or in beer batter	6 - 7	-
Vegetables, mushrooms, breaded or battered, tempura	6 - 7	-
Small baked items, e.g. doughnuts, fruit in batter	4 - 5	-

* Without lid
** Turn several times
*** Preheat to heat setting 8 - 8.5

Manual hood control

You can control the ventilation setting manually.

Note: Using tall items of cookware may prevent the extraction system from working at optimum power. The extraction power can be improved by placing a lid on the cookware at an angle.

Activation

1. Touch the symbol.
   The ventilation system starts at the preset power level.
2. Within the next 10 seconds, select the required power level in the settings area.
   The power level that is selected is displayed in the settings area.
3. Touch the symbol to confirm the selected setting.

The ventilation system switched on.

Changing and switching off

Touch the symbol and select the required power level or set it to 0 in the settings area.

Intensive setting

There are two intensive modes for the ventilation system. If you activate the intensive settings, the ventilation system works at maximum output for a short time.

Activation

Touch the symbol and select the required intensive setting.

- **Intensive setting I** : Touch the boost symbol. The line above the symbol lights up. The intensive setting is activated.
- **Intensive setting II**: Touch the boost symbol twice. The line above the symbol flashes. The intensive setting is activated.

Note: After eight minutes, the appliance automatically switches back to fan setting 9.

Changing and switching off

Touch the symbol and select the required power level or set it to 0 in the settings area.

Automatic start

If you select a power level for a cooking zone, the automatic start switches on.

The hob comes with sensor-controlled automatic start as standard. You can find out how to change this setting in section → *"Basic settings"*.

Automatic start with sensor control

The air quality sensor registers the cooking vapours automatically, selects the optimum power level, and the line above the A symbol lights up.

Automatic start via power levels

The ventilation system switches on at a power level in accordance with the respective power level for the cooking zone.

Automatic mode with sensor control

The hob has an air quality sensor that automatically registers the cooking vapours and switches on the ventilation system.

If the automatic start is switched off or is set in accordance with the power levels, you can switch on operation with sensor control manually at any time.

Activation

Touch the A symbol. The line above the symbol lights up more brightly and the optimum power level is set automatically with the help of the sensor.

Deactivating

Touch the A symbol. The line above the symbol goes out. The sensor control is switched off.

Note: You can find out how to set the sensor sensitivity in section → *"Basic settings"*.

Run-on function

The run-on function allows the ventilation system to continue operating for a few minutes after the hob has been switched off. This removes any remaining cooking vapours. The ventilation system then automatically switches off.

The hob is supplied as standard with the run-on time with a maximum switch-off time. You can find out how to change this setting in section → *"Basic settings"*.

Activation

The run-on time is possible depending on the configured basic settings:

- Via the control for the air quality sensor. The A symbol lights up.
- With a maximum switch-off time. The symbol lights up.

Note: The run-on function only switches on if at least one cooking zone has been switched on for at least one minute.

Deactivating

Manual

Touch the or A symbols. The run-on function is switched off.

Automatic

The run-on function is switched off in the following cases:

- The run-on time has elapsed.
- The appliance is switched on again.
- The sensor ensures that the air quality is in order.

Flex Zone

You can use each flex zone as a single hotplate or as two independent hotplates, as required.

It consists of four inductors that work independently of each other. If using the flexible cooking zone, only the area that is covered by cookware is activated.

Advice on using cookware

To ensure that the cookware is detected and heat is distributed evenly, correctly centre the cookware:

As a single hotplate	
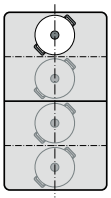	Diameter smaller than or equal to 13 cm Place the cookware on one of the four positions that can be seen in the illustration.
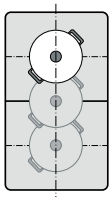	Diameter greater than 13 cm Place the cookware on one of the three positions that can be seen in the illustration.
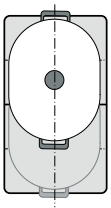	If the cookware takes up more than one hotplate, place it starting on the upper or lower edge of the flexible cooking zone.

As two independent hotplates	
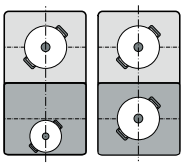	The front and rear hotplates each have two inductors and can be used independently of each other. Select the required heat setting for each of the hotplates. Use only one item of cookware on each hotplate.

As two independent hotplates

The flexible cooking zone is used like two independent hotplates.

Activating

See section ⟶ *"Operating the appliance"*

As a single hotplate

Using the entire cooking zone by connecting both hotplates.

Connecting the two cooking zones

The cooking zones are automatically connected or separated depending on where the pot or pan is placed.

Connecting them manually:

1. Set the pot or pan down. Select one of the two cooking zones in the Flex Zone and set the power level.
2. Touch the ≣ symbol. The indicator lights up. The power level appears in the display for the cooking zone.

The Flex Zone is activated.

Changing the heat setting

Select one of the two hotplates in the flexible cooking zone and change the heat setting in the settings range.

Adding a new item of cookware

1. Place the new pot or pan on the position that is suitable for its size.
   If the cookware has been set down correctly, the appliance will detect it. The appliance separates the zones and selects this automatically.
2. Select the power level you require from the settings area.

Notes

- If you move or lift the item of cookware on the active cooking zone, the cooking zone will start searching automatically and the power level you selected previously will be retained.
- You can switch off the automatic cookware detection function. You will find more information about this in the section entitled ⟶ *"Basic settings"*.

Separating the two cooking zones

The cooking zones are automatically connected or separated depending on where the pot or pan is placed.

To separate the cooking zones manually, select one of the two cooking zones in the Flex Zone and touch the ≣ symbol.

The Flex Zone is deactivated. The two cooking zones will now operate independently of one another.

Notes

- If the hob is switched off, and then switched back on again later, the flexible cooking zone is reset to function as two independent hotplates.
- To change the configuration settings for the flexible cooking zone, refer to section ⟶ *"Basic settings"*.

Move function

This function activates the entire flexible cooking zone, which is divided into three cooking areas and which has preset heat settings.

Only use one item of cookware. The size of the cooking area depends on the cookware used and whether it is positioned correctly.

Cooking areas

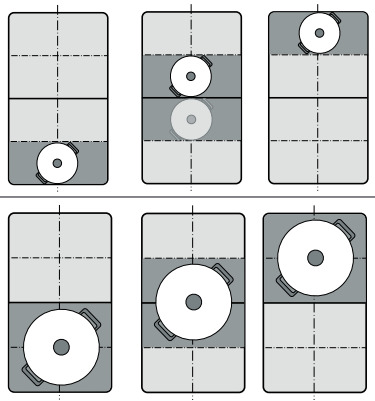

This means that an item of cookware can be moved during the cooking process to another cooking area with another heat setting:

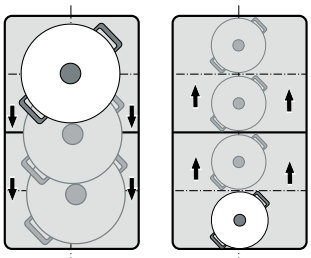

Preset heat settings:

Front area = heat setting 9

Middle area = heat setting 5

Rear area = heat setting 1.5

The preset heat settings can be changed independently of one another. You can find out how to change these in the section on → *"Basic settings"*.

Notes

- If more than one item of cookware is detected on the flexible cooking zone, the function is deactivated.
- If the cookware is moved within the flexible cooking zone or lifted up, the hob automatically starts searching and the heat setting of the area in which the vessel was detected is set.
- You can find information on the size and positioning of the cookware in the section on → *"Flex Zone"*

Activation

1. Select one of the two hotplates in the flexible cooking zone.
2. Touch the symbol. The indicator beside the symbol lights up. The flexible cooking zone is activated as a single hotplate.
   The heat setting in the area in which the cookware is located lights up in the hotplate display.

The function has now been activated.

Changing the heat setting

The heat settings for the individual cooking areas can be changed during the cooking process. Set the cookware down on the cooking area and change the heat setting in the settings range.

Notes

- Only the heat setting in the area in which the cookware is located is changed.
- If the function is deactivated, the heat settings for the three cooking areas are reset to the preset values.

Deactivating

Touch the symbol. The indicator beside the symbol goes out.

The function was deactivated.

Note: If one of the cooking areas is set to 0, the function deactivates after a few seconds.

Time-setting options

Your hob has three timer functions:

- Programming the cooking time
- Kitchen timer
- Stopwatch function

Programming the cooking time

The hotplate automatically switches off after the time that is set has elapsed.

Setting procedure:

1. Select the hotplate and the required heat setting.
2. Touch the ⏲ symbol. The 00 symbol and the ▼ indicator light up in the timer display.
   ⏲ lights up in the cooking zone display.

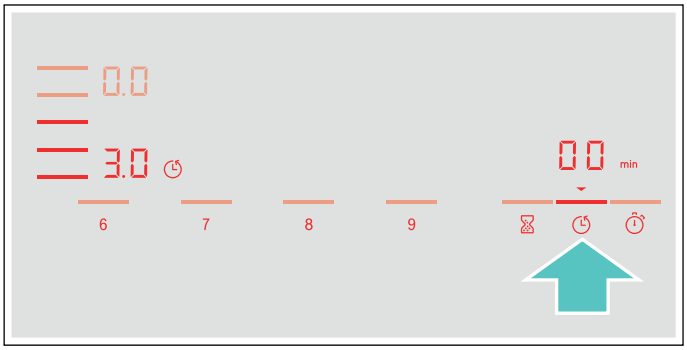

3. Within the next 10 seconds, set the required cooking time in the settings range.

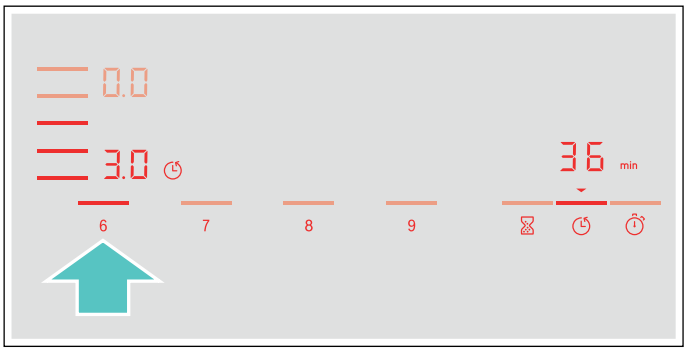

4. Touch the ⏲ symbol to confirm the selected setting.

The cooking time begins to elapse.

Notes

- The same cooking time can be set automatically for all hotplates. The set time for each of the hotplates counts down independently.
  You can find information on automatically programming the cooking time in section → *"Basic settings"*
- If the flexible cooking zone is selected as the only hotplate, the set time for the entire cooking zone is the same.
- If the Move function is selected for the combined hotplate, the set time for the three hotplates is the same.

Frying sensor

If a cooking time has been programmed for a hotplate and the frying sensor has been activated, the cooking time will not begin to count down until the selected temperature setting has been reached.

Cooking functions

If a cooking time has been programmed for a hotplate and one of the cooking functions has been activated, the set cooking time will not start to count down until the temperature for the selected area has been reached.

Changing or deleting the time

Select the hotplate and then touch the ⏲ symbol.

Change the cooking time in the settings range or set 00 to delete the programmed cooking time.

Touch the ⏲ symbol to confirm the selected setting.

When the time has elapsed

The hotplate switches off, the ⏲ display flashes and the hotplate switches to the 00 heat setting. An audible signal sounds.

00 and the ▼ indicator flash in the timer display.

When the ⏲ symbol is touched, the indicators go out and the acoustic signal ceases.

Notes

- To set a cooking time of under 10 minutes, always touch **0** before you select the required value.
- If a cooking time was programmed for several hotplates, the time information for the selected hotplate is shown in the timer display.
- Select the relevant hotplate to call up the remaining cooking time.
- You can set a cooking time of up to 99 minutes.

The kitchen timer

You can use the kitchen timer to set a time of up to 99 minutes.

This functions independently from the hotplates and from other settings. This function does not automatically switch off a hotplate.

Setting procedure

1. Touch the ⌛ symbol. The 00 symbol and the ▼ indicator light up in the timer display.
2. Select the required time on the control panel and touch the ⌛ symbol to confirm.

After a few seconds, the time begins to elapse.

Changing or deleting the time

Touch the ⌛ symbol.

Change the cooking time in the settings range or set 00 to delete the programmed cooking time.

Touch the ⌛ symbol to confirm the selected setting.

When the time has elapsed

An audible signal sounds once the time has elapsed. 00 and the ▼ symbol flash in the timer display.

The indicators go out after touching the ⌛ symbol.

Stopwatch function

The stopwatch function displays the time that has elapsed since activation.

This functions independently from the hotplates and from other settings. This function does not automatically switch off a hotplate.

Activating

Touch the ⏱ symbol. The 00 symbol and the ▼ indicator light up in the timer display.

The cooking time begins to elapse.

Deactivating

Touching the ⏱ symbol stops the stopwatch function. The timer displays remain lit.

If you touch the ⏱ symbol again, the displays go out.

The function is deactivated.

PowerBoost function

The PowerBoost function enables you to heat up large quantities of water faster than when using heat setting 9.

This function can always be activated for a hotplate, provided the other hotplate in the same group is not in use (see illustration).

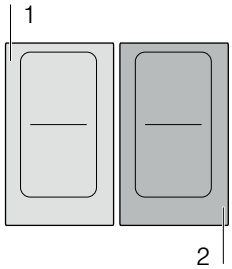

Note: The PowerBoost function can also be activated in the flexible area if the cooking zone is being used as a single hotplate.

Activating

1. Select a hotplate.
2. Touch the boost symbol.
   The b. indicator lights up.

The function is activated.

Deactivating

1. Select a hotplate.
2. Touch the boost symbol.
   The b display goes out and the hotplate switches back to heat setting 9.

The function is deactivated.

Note: In certain circumstances, the PowerBoost function can switch itself off automatically in order to protect the electronic elements inside the hob.

ShortBoost function

The ShortBoost function enables you to heat cookware faster than when using heat setting 9.

After deactivating the function, select the appropriate heat setting for your food.

This function can always be activated for a hotplate, provided the other hotplate in the same group is not in use (see illustration).

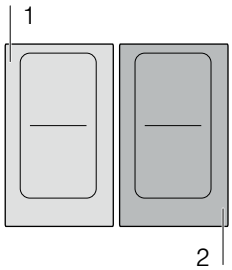

Note: With the flexible cooking zone, the ShortBoost function can be activated even if it is used as the only cooking zone.

Recommendations for use

- Always use cookware that has not been pre-heated.
- Use pots and pans with a flat base. Do not use cookware with a thin base.
- Never leave empty cookware, oil, butter or lard to heat up unattended.
- Do not place a lid on the cookware.
- Place the cookware on the centre of the hotplate. Ensure that the diameter of the base of the cookware corresponds to the size of the hotplate.
- You can find information on the type, size and positioning of the cookware in section → *"Induction cooking"*

Activating

1. Select a hotplate.
2. Touch the boost symbol twice.
   The Pb. indicator lights up.

The function is activated.

Deactivating

1. Select a hotplate.
2. Touch the boost symbol.
   The Pb. display goes out and the hotplate switches back to heat setting 9.

The function is deactivated.

Note: After 30 seconds, this function will automatically switch off.

Keep warm function

This function is suitable for melting chocolate or butter and for keeping food warm.

Activating

1. Select the required heat setting.
2. Within the next 10 seconds, touch the symbol.
   The Lo indicator lights up.

The function is activated.

Deactivating

1. Select a hotplate.
2. Touch the symbol.
   The Lo display goes out. The hotplate switches itself off and the residual heat indicator appears.

The function is deactivated.

Transferring settings

This function can be used to transfer the heat setting, the programmed cooking time and the selected cooking function from one hotplate to another.

To transfer the settings, move the cookware from the hotplate which is switched on to another hotplate.

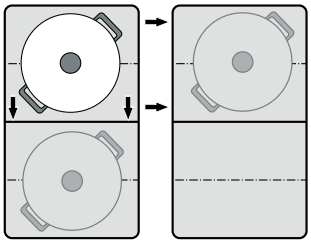

Note: You can find additional information on the positioning of the cookware in the section on → *"Flex Zone"*

Activation

1. Move the cookware from the hotplate which is switched on to another hotplate.
   The heat setting of the original hotplate flashes.
   The cookware is detected and the previously selected heat setting and the ⏲ symbol flash in the new hotplate display.
2. Select the new hotplate to confirm the settings.
   The heat setting of the original hotplate is set to 00.

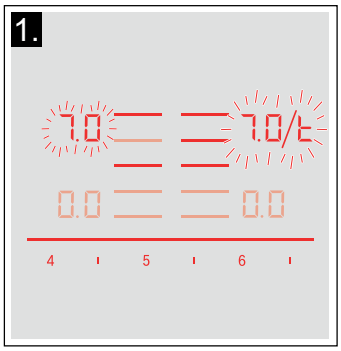

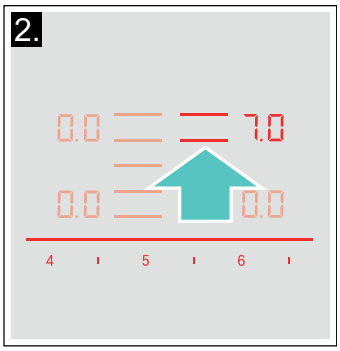

The settings have been transferred to the new hotplate.

Notes

- Move the cookware to a hotplate which is not switched on, which you have not yet preset or on which no other cookware has been placed.
- The PowerBoost or ShortBoost function can then only be moved from left to right or right to left if no hotplate is active.
- If a new item of cookware is set down on another hotplate before the settings have been confirmed, this function is ready for both cooking vessels.
- If several vessels are moved, the function is only ready for the vessel which was last moved.

Cooking assist functions

The cooking assistance functions make cooking easy and always give you excellent results. The recommended temperature settings are suitable for any type of cooking.

They enable you to cook without using excessive heat and promise the perfect cooking and frying results.

Sensors measure the heat of the saucepan or frying pan throughout the cooking process. This ensures that the power is continuously controlled and that the right temperature is maintained.

Food can be added once the selected temperature has been reached. Food will not be overheated and liquids will not boil over.

The hotplates that have a frying sensor are marked with the frying sensor symbol.

The cooking functions are available to all hotplates if a wireless temperature sensor is connected.

In this section, you will find information on:

- Cooking assistant function types
- Suitable cookware
- Sensors and special accessories
- Functions and heat settings
- Recommended dishes

Cooking assistant function types

You can use the cooking assistance functions to select the best cooking type for each kind of food.

The table shows the various different settings that are available for the cooking assistant functions:

Cooking assistance functions	Temperature settings	Cookware	Availability	Activate
Frying sensor				
Roasting/frying with a small amount of oil	1, 2, 3, 4, 5			
Cooking functions				
Heating/keeping warm	1 / 70 °C		All hotplates	
Poaching	2 / 90 °C		All hotplates	
Cooking	3 / 100 °C		All hotplates	
Cooking in a pressure cooker	4 / 120 °C		All hotplates	
Frying with a large amount of oil in the saucepan*	5 / 170 °C		All hotplates	

*Preheat with the lid on and fry with the lid off.

If the hob does not have a wireless cooking sensor, this can be purchased from specialist retailers, our after-sales service or our official website.

Suitable cookware

Select the cooking zone with the diameter that most closely matches that of the base of the cookware and place the cookware in the centre of this cooking zone.

For the cooking functions, use cookware that is tall enough that, when the required volume of water is added, the water level is higher than the silicone patch for the wireless cooking sensor.

You can purchase special frying pans designed for the frying sensor. You can buy these from the after-sales service, from specialist retailers or online. You will find a comprehensive range of accessories for this appliance in our brochures and online.

The availability and the option of online orders depend on the respective country. You can find information about this in the sales brochures.

Note: Not all optional accessories are suitable for every appliance. When purchasing the accessory, always quote the exact product number (E no.) of your appliance .

Optional accessories
15 cm frying pan Recommended accessory for the frying sensor.
19 cm frying pan Recommended accessory for the frying sensor.
21 cm frying pan Recommended accessory for the frying sensor.
Teppan Yaki Recommended accessory for the frying sensor. For the flexible cooking zone only.
Grill container Recommended accessory for the frying sensor. For the flexible cooking zone only.

These frying pans have a non-stick coating so that you can fry food with a small amount of oil.

Notes

- The frying sensor has been configured specifically for this type and size of frying pan.
- Using a frying pan of a different size or one that is poorly positioned on the flexible cooking zones may result in the frying sensor not being activated. See section ⟶ *"Flex Zone"*.
- Other types of frying pan may overheat and reach a temperature above or below the selected heat setting. Try the lowest temperature setting to begin with and change it if required.

Any cookware that is suitable for induction cooking can be used with the cooking functions. You can find information on which types of cookware can be used with an induction hob in section ⟶ *"Induction cooking"*.

The cooking assistance functions table lists which cookware is suitable for which functions.

Sensors and special accessories

The sensors measure the temperature of the pot throughout the entire cooking process. This ensures that the cooking power is controlled with high precision to maintain the correct temperature and achieve optimum cooking results.

Your hob has two different temperature-measuring systems for achieving the best results:

- Temperature sensors that are located inside the hob and monitor the temperature of the base of the cookware. Suitable for the frying sensor.
- A wireless cooking sensor that transmits information about the temperature of the cookware to the control panel. Suitable for the cooking functions.

The cooking sensor is essential for using the cooking functions.

If your hob does not have a wireless cooking sensor, this can be purchased from specialist retailers, our technical after-sales service or our official website by quoting the reference number HEZ39050.

You can find information about the cooking sensor in section ⟶ *"Preparing and maintaining the wireless temperature sensor"*

Functions and heat settings

Frying sensor

You can use the frying sensor when pan-frying food with a small amount of oil.

Hotplates with this function are marked with the frying sensor symbol.

Benefits

- The hotplate only heats up when necessary. This saves energy. Oil and fat will not overheat.
- A signal will sound once the empty frying pan has reached the optimum temperature for adding oil and food.

Notes

- Do not put the lid on the pan as this will prevent the controller from working. You can use a splatter guard to prevent the oil from spitting.
- Use oil or fat that is suitable for frying. If using butter, margarine, cold-pressed olive oil or lard, use temperature setting 1 or 2.
- Never leave fat or oil unattended while you are heating it.
- If the hotplate is a higher temperature than the cookware or vice versa, the temperature sensor will not be activated correctly.
- Always use the cooking functions when frying with a large amount of oil in the saucepan. "Frying with a large amount of oil in the saucepan", heat setting 5.

Temperature settings

Temperature level		Suitable for
1	very low	Preparing and reducing sauces, stewing vegetables and frying food in extra virgin olive oil, butter or margarine.
2	low	Frying food in extra virgin olive oil, butter or margarine, e.g. omelettes.
3	medium - low	Frying fish and thick food such as meatballs and sausages.
4	medium - high	Frying steaks (well done), breaded frozen products, and thin food such as schnitzel, strips of meat and vegetables.
5	high	Frying food at high temperatures, e.g. rare steaks (rare or medium), potato fritters and fried potatoes.

Setting procedure

Select the appropriate temperature level from the table. Set an empty item of cookware down on the cooking zone.

1. Select the hotplate. Touch the symbol. lights up in the hotplate display.

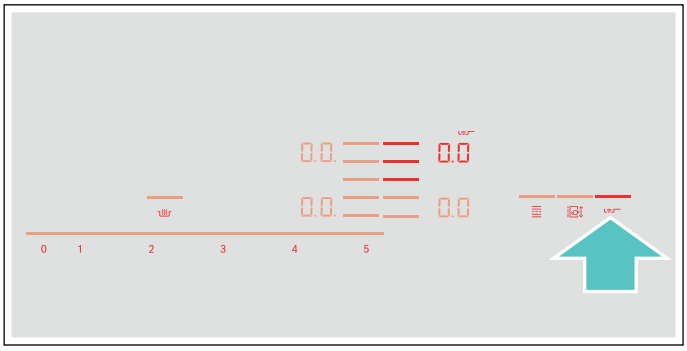

2. Within the next 10 seconds, select the required temperature setting from the settings range.

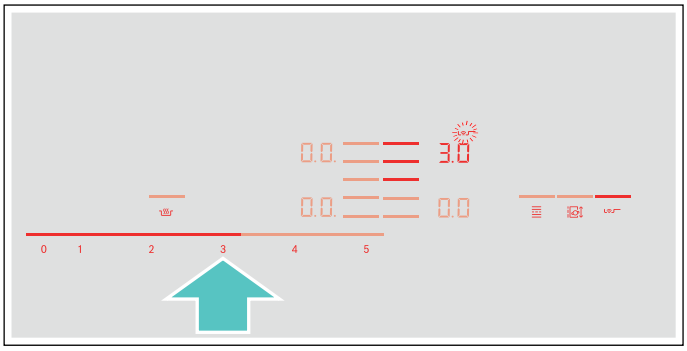

The function has now been activated.
The temperature symbol flashes until the frying temperature is reached. A signal sounds and the temperature symbol goes out.

3. Once the frying temperature has been reached, add the fat and then the food to the pan.

Note: Turn the food so that it does not burn.

Switching off the frying sensor

Select the hotplate and set it to 0.0 in the settings range. The hotplate switches itself off and the residual heat indicator appears.

Cooking functions

You can use these functions to heat, simmer or cook food, or cook it in a pressure cooker or fry it in a saucepan with sufficient oil at a controlled temperature.

These cooking functions are available for all hotplates.

Benefits

- The cooking zone only continues heating for as long as this is necessary to maintain the temperature. This saves energy and prevents oil or fat from overheating.
- The temperature is continuously monitored. This prevents the food from spilling over. In addition, the temperature setting does not need to be changed.
- A signal sounds once the water or oil has reached the optimum temperature for adding the food. The table shows if the food needs to be added right at the start.

Notes

- Use pots and pans with a thick, flat base. Do not use pots and pans with a thin or domed base.
- Fill the pot so that the contents reach high enough to cover the cooking sensor's silicone patch.
- Use the frying sensor when frying with a small amount of oil.
- Position the cookware in such a way that the cooking sensor is pointing towards the outer side of the hob.
- Do not remove the cooking sensor from the pot during cooking.
- Remove the cooking sensor from the pot after cooking. Be careful as the cooking sensor may be very hot.

Temperature ranges and settings

Cooking functions	Temperature setting	Temperature range	Suitable for
Heating, keeping warm	1/70 °C	60 - 70 °C	E.g. soups, punch
Poaching	2/90 °C	80 - 90 °C	E.g. rice, milk
Cooking	3/100 °C	90 - 100 °C	E.g. pasta, vegetables
Cooking in a pressure cooker	4/120 °C	110 - 120 °C	E.g. chicken, stew.
Frying with a large amount of oil in the saucepan	5/170 °C	170 - 180 °C	E.g. doughnuts, meatballs

Tips for cooking with the cooking functions

- Heating/keep-warm function: Frozen products in portions, e.g. spinach. Place the frozen product in the cookware. Pour in the volume of water specified by the manufacturer. Cover the cookware and select the setting 1/70 °C. Stir occasionally.
- Poaching function: This function is suitable for cooking food at low temperatures and for thickening sauces and stews. Select setting 2/90 °C.
- Boiling function: This function allows you to boil water with a lid without it boiling over. You can boil efficiently thanks to the temperature control. Select setting 3/100 °C.
- Cooking in a pressure cooker function: Follow the manufacturer's recommendations. Continue cooking for the recommended time once the signal has sounded. Select setting 4/120 °C.
- Frying with a large amount of oil in the saucepan function: To heat the oil with the lid on. Remove the lid after the signal tone and add the food (insofar as there are no other instructions in the "Recommended dishes" table). Select setting 5/170 °C.

Notes

- Always cook with the lid on. Exception: "Frying with a large amount of oil in the saucepan", temperature setting 5/170 °C.
- If an audible signal does not sound, make sure that the lid is on the pan.
- Never leave oil unattended during heating. Use oil or fat that is suitable for frying. Do not mix different cooking fats together, e.g. oil and lard. Mixtures of different fats may froth up when hot.
- If you are not satisfied with the cooking result, e.g. when cooking potatoes, next time use less water but keep the recommended temperature setting.

Setting the boiling point

The point at which water starts to boil depends on the height of your home above sea level. You can set the boiling point if water is boiling too strongly or not strongly enough. To do this, proceed as follows:

- Select the basic setting c4; see the section on → *"Basic settings"*
- The basic setting is 3 as standard. If your home is between 200 and 400 metres above sea level, there is no need to set the boiling point. If not, choose the correct setting from the following table according to your altitude:

Height	Setting c4
0 - 100 m.	1
100 - 200 m.	2
200 - 400 m.	3*
400 - 600 m.	4
600 - 800 m.	5
800 - 1000 m.	6
1000 - 1200 m.	7
1200 - 1400 m.	8
Above 1400 m.	9

* Basic setting

Note: Temperature setting 3/100 °C is sufficient for efficient boiling, even if the water does not boil very strongly. However, the boiling point can be changed. For example, you can set a lower altitude if you want the water to boil more strongly.

Setting procedure

You will need to connect the wireless cooking sensor to the control panel before using the cooking functions for the first time. Refer to the section entitled ⟶ *"Wireless temperature sensor"* to find out how to do this

1. Attach the temperature sensor to the saucepan; see the section on ⟶ *"Preparing and maintaining the wireless temperature sensor"*
2. Place a saucepan filled with sufficient liquid on the required hotplate and always put the lid on.
3. Select the hotplate on which you have placed the saucepan with the temperature sensor.
4. Touch the symbol on the temperature sensor. The indicator will light up in the control panel.

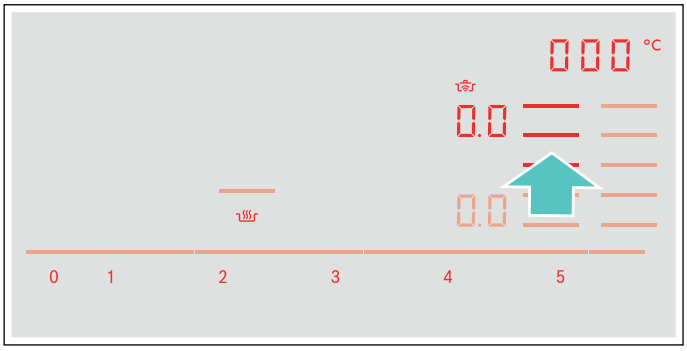

5. Select the right temperature setting from the table.

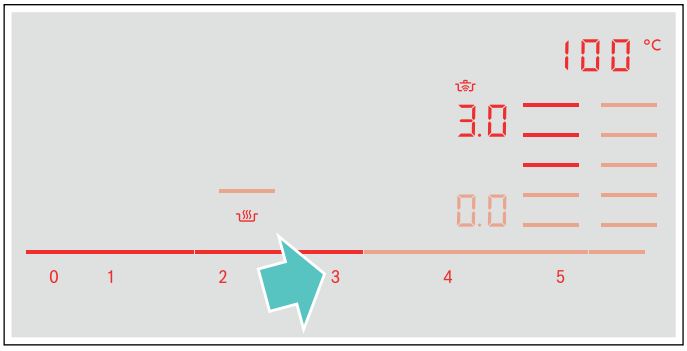

The function has now been activated.
The temperature symbol will flash until the water or oil has reached the right temperature for adding the food. A signal will sound and the temperature symbol will stop flashing.

6. Once the signal has sounded, take the lid off and add the food. Keep the lid on during cooking.
   Note: Do not cover the pan when using the "Frying with a large amount of oil in the saucepan" function.

Switching off cooking functions

Select the hotplate and set it to 0.0 on the control panel. The hotplate will switch off and the residual heat indicator will appear.

Note: To re-activate the cooking functions, wait for approximately 10 seconds.

Recommended dishes

The following table shows a selection of dishes and is arranged by food type. The temperature and the cooking time depend on the amount, the condition and the quality of the food.

Cooking assistance functions:

	Frying sensor for pans
	Cooking sensor

Meat	Cooking assistance functions	Temperature level	Total cooking time from signal tone (mins)
Frying with little amount of oil			
Escalope, plain [1]		4	6 - 10
Escalope, breaded [1]		4	6 - 10
Fillet [2]		4	6 - 10
Chops [1]		3	10 - 15
Cordon bleu [1]		4	10 - 15
Viennese schnitzel [1]		4	10 - 15
Steak, rare (3 cm thick) [2]		5	6 - 8
Steak, medium (3 cm thick) [2]		5	8 - 12
Steak, well done (3 cm thick) [1]		4	8 - 12
Poultry breast (2 cm thick) [1]		3	10 - 20
Meat cut into strips [3]		4	7 - 12
Gyros [3]		4	7 - 12
Bacon [1]		2	5 - 8
Minced meat [3]		4	6 - 10
Hamburgers (1.5 cm thick) [1]		3	6 - 15
Meatballs (2 cm thick) [1]		3	10 - 20
Rissoles [1]		3	10 - 20
Boiled sausages [1]		3	8 - 20
Raw sausages [1]		3	8 - 20
Simmering			
Sausages [4]		2 - 90 °C	10 - 20
Boiling			
Meatballs [4]		3 - 100 °C	20 - 30
Chicken [4]		3 - 100 °C	60 - 90
Beef [4]		3 - 100 °C	60 - 90

[1] Turn frequently.

[2] Add the oil and the food after the signal tone.

[3] Stir frequently.

[4] Heat up and cook with the lid on. Add the food after the signal sounds.

[5] Add the food at the start.

[6] Heat the oil with the lid on. Fry one portion after the other without the lid.

Meat	Cooking assistance functions	Temperature level	Total cooking time from signal tone (mins)
Cooking in a pressure cooker			
Chicken in pressure cooker [5]		4 - 120 °C	15 - 25
Beef in pressure cooker [5]		4 - 120 °C	15 - 25
Deep fry with a large amount of oil			
Deep frying chicken portions [6]		5 - 170 °C	10 - 15
Deep fry meatballs [6]		5 - 170 °C	10 - 15

[1] Turn frequently.
[2] Add the oil and the food after the signal tone.
[3] Stir frequently.
[4] Heat up and cook with the lid on. Add the food after the signal sounds.
[5] Add the food at the start.
[6] Heat the oil with the lid on. Fry one portion after the other without the lid.

Fish	Cooking assistance functions	Temperature level	Total cooking time from signal tone (mins)
Frying with a little amount of oil			
Fish fillet, plain [1]		4	10 - 20
Fish fillet, breaded [1]		3	10 - 20
Prawns [1]		4	4 - 8
Scampi [1]		4	4 - 8
Fried whole fish [1]		3	10 - 20
Poaching			
Stewed fish [2]		2 - 90 °C	15 - 20
Deep fry with a large amount of oil			
Deep-fat frying fish in beer batter [3]		5 - 170 °C	10 - 15
Deep-fat frying breaded fish [3]		5 - 170 °C	10 - 15

[1] Turn frequently.
[2] Heat up and cook with the lid on. Add the food after the signal sounds.
[3] Heat the oil with the lid on. Fry one portion after the other without the lid.

Egg dishes	Cooking assistance functions	Temperature level	Total cooking time from signal tone (mins)
Frying with a little amount of oil			
Fried eggs in butter [1]		2	2 - 6
Fried eggs [2]		4	2 - 6
Scrambled eggs [3]		2	4 - 9
Omelette [4]		2	3 - 6
Crêpes [4]		5	1,5 - 2,5
French toast [4]		3	4 - 8
Shredded raisin pancake [4]		3	10 - 15
Boiling			
Boiled eggs [5]		3 - 100 °C	5 - 10

[1] Add butter and the food after the signal tone sounds.
[2] Add the oil and food to the frying pan after the signal sounds.
[3] Stir frequently.
[4] Time indicated per portion. Fry individually.
[5] Add the food at the start.

Vegetables and pulses	Cooking assistance functions	Temperature level	Total cooking time from signal tone (mins)
Frying with a little amount of oil			
Garlic [1]		2	2 - 10
Onions, glazed [1]		2	2 - 10
Onion rings [1]		3	5 - 10
Courgettes [2]		3	4 - 12
Aubergines [2]		3	4 - 12
Peppers [1]		3	4 - 15
Green asparagus [2]		3	4 - 15
Mushrooms [1]		4	10 - 15
Sautéing vegetables in oil [1]		1	10 - 20
Glazed vegetables [1]		3	6 - 10

[1] Stir frequently.
[2] Turn frequently.
[3] Heat up and cook with the lid on. Add the food to the frying pan after the signal sounds.
[4] Add the food at the start.
[5] Heat the oil with the lid on. Fry one portion after the other without the lid.

Vegetables and pulses	Cooking assistance functions	Temperature level	Total cooking time from signal tone (mins)
Boiling			
Broccoli [3]		3 - 100 °C	10 - 20
Cauliflower [3]		3 - 100 °C	10 - 20
Brussels sprouts [3]		3 - 100 °C	30 - 40
Green beans [3]		3 - 100 °C	15 - 30
Chickpeas [4]		3 - 100 °C	60 - 90
Peas [3]		3 - 100 °C	15 - 20
Lentils [4]		3 - 100 °C	45 - 60
Cooking in a pressure cooker			
Vegetables in a pressure cooker [4]		4 - 120 °C	3 - 6
Chickpeas in a pressure cooker [4]		4 - 120 °C	25 - 35
Beans in a pressure cooker [4]		4 - 120 °C	25 - 35
Lentils in a pressure cooker [4]		4 - 120 °C	10 - 20
Deep-frying with a large amount of oil			
Deep frying breaded vegetables [5]		5 - 170 °C	4 - 8
Deep frying vegetables in beer batter [5]		5 - 170 °C	4 - 8
Deep frying breaded mushrooms [5]		5 - 170 °C	4 - 8
Deep frying mushrooms in beer batter [5]		5 - 170 °C	4 - 8

[1] Stir frequently.
[2] Turn frequently.
[3] Heat up and cook with the lid on. Add the food to the frying pan after the signal sounds.
[4] Add the food at the start.
[5] Heat the oil with the lid on. Fry one portion after the other without the lid.

Potatoes	Cooking assistance functions	Temperature level	Total cooking time from signal tone (mins)
Frying with a little amount of oil			
Potatoes boiled in their skin [1]		5	6 - 12
Fried potatoes (made from raw potatoes) [1]		4	15 - 25
Potato pancakes [2]		5	2,5 - 3,5
Swiss rösti [3]		2	50 - 55
Glazed potatoes [1]		3	10 - 15
Simmering			
Potato dumplings [4]		2 - 90 °C	30 - 40

[1] Stir frequently.
[2] Time indicated per portion. Fry individually.
[3] Add the oil and food to the frying pan after the signal sounds.
[4] Heat up and cook with the lid on. Add the food after the signal sounds.
[5] Add the food at the start.

Potatoes	Cooking assistance functions	Temperature level	Total cooking time from signal tone (mins)
Boiling			
Boiling potatoes [5]		3 - 100 °C	30 - 45
Cooking in a pressure cooker			
Potatoes in a pressure cooker [5]		4 - 120 °C	10 - 20

[1] Stir frequently.
[2] Time indicated per portion. Fry individually.
[3] Add the oil and food to the frying pan after the signal sounds.
[4] Heat up and cook with the lid on. Add the food after the signal sounds.
[5] Add the food at the start.

Pasta and cereals	Cooking assistance functions	Temperature level	Total cooking time from signal tone (mins)
Simmering			
Rice [1]		2 - 90 °C	25 - 35
Polenta [2]		2 - 90 °C	3 - 8
Semolina pudding [2]		2 - 90 °C	5 - 10
Boiling			
Pasta [2]		3 - 100 °C	7 - 10
Stuffed pasta [2]		3 - 100 °C	6 - 15
Cooking in a pressure cooker			
Rice in a pressure cooker [3]		4 - 120 °C	5 - 8

[1] Heat up and cook with the lid on. Add the food after the signal sounds.
[2] Stir frequently.
[3] Add the food at the start.

Soups	Cooking assistance functions	Temperature level	Total cooking time from signal tone (mins)
Simmering			
Instant creamy soups [1]		2 - 90 °C	10 - 15
Boiling			
Home-made broths [2]		3 - 100 °C	60 - 90
Instant soups [1]		3 - 100 °C	5 - 10
Cooking in a pressure cooker			
Home-made broths in a pressure cooker [2]		4 - 120 °C	20 - 30

[1] Stir frequently.
[2] Add the food at the start.

Sauces	Cooking assistance functions	Temperature level	Total cooking time from signal tone (mins)
Frying with a little amount of oil			
Tomato sauce with vegetables [1]		1	25 - 35
Béchamel sauce [1]		1	10 - 20
Cheese sauce [1]		1	10 - 20
Reducing sauces [1]		1	25 - 35
Sweet sauces [1]		1	15 - 25

[1] Stir frequently.

Desserts	Cooking assistance functions	Temperature level	Total cooking time from signal tone (mins)
Simmering			
Rice pudding [1]		2 - 90 °C	40 - 50
Porridge oats [1]		2 - 90 °C	10 - 15
Chocolate pudding [1]		2 - 90 °C	3 - 5
Boiling			
Compote [2]		3 - 100 °C	15 - 25
Deep frying with a large amount of oil			
Deep frying Berliners [3]		5 - 170 °C	5 - 10
Deep frying ring doughnuts [3]		5 - 170 °C	5 - 10
Deep frying buñuelos [3]		5 - 170 °C	5 - 10

[1] Stir frequently.

[2] Add the food at the start.

[3] Heat the oil with the lid on. Fry one portion after the other without the lid.

Frozen products	Cooking assistance functions	Temperature level	Total cooking time from signal tone (mins)
Frying with a little amount of oil			
Escalope [1]		4	15 - 20
Cordon bleu [1]		4	10 - 30
Poultry breast [1]		4	10 - 30
Chicken nuggets [1]		4	10 - 15
Gyros [2]		4	10 - 15
Kebab [2]		4	10 - 15
Fish fillet, plain [1]		3	10 - 20
Fish fillet, breaded [1]		3	10 - 20
Fish fingers [1]		4	8 - 12
Fry French fries [2]		5	4 - 6
Stir-fries [2]		3	6 - 10
Spring rolls [1]		4	10 - 30
Camembert [1]		3	10 - 15
Keeping warm, heating			
Vegetable in cream sauce [2]		1 - 70 °C	15 - 20
Boiling			
Green beans, frozen [3]		3 - 100 °C	15 - 30
Fry with a large amount of oil			
Deep-frying French Fries [4]		5 - 170 °C	4 - 8

[1] Turn frequently.

[2] Stir frequently.

[3] Heat up and cook with the lid on. Add the food after the signal sounds.

[4] Heat the oil with the lid on. Fry one portion after the other without the lid.

Other	Cooking assistance functions	Temperature level	Total cooking time from signal tone (mins)
Frying with a little amount of oil			
Camembert [1]		3	7 - 10
Croûtons [2]		3	6 - 10
Dried ready meals [3]		1	5 - 10
Toasting almonds [4]		4	3 - 15
Toasting nuts [4]		4	3 - 15
Toasting pine nuts [4]		4	3 - 15
Keeping warm, heating			
Heating goulash soup [5]		1 - 70 °C	10 - 20
Heating mulled wine [5]		1 - 70 °C	5 - 15
Simmering			
Heating milk [5]		2 - 90 °C	3 - 10

[1] Turn frequently.

[2] Stir frequently.

[3] Add the water after the signal sounds. Add the food as soon as the water boils.

[4] Add the food after the signal tone sounds.

[5] Add the food at the start.

Teppan Yaki and Grill for the Flex Zone

The Teppan Yaki and Grill accessories are ideal for the FlexZone and are perfect for using the frying sensor.

Grill

The Grill adapts to the Flex Zone. You can cook large and small quantities of meat, fish, fresh vegetables and bread with very little oil, healthily and easily. The grooved shape ensures that food absorbs less fat. The ease of operation makes it possible to grill dishes that look and taste like they have been cooked on a traditional grill. Add a little oil to the grill or the surface of the food to facilitate heat transfer.

Teppan Yaki

The Teppan Yaki enables you to cook meat, fish, seafood, vegetables, desserts and bread with very little oil, easily and healthily. The Teppan Yaki adapts perfectly to the Flex Zone. Direct contact with the plate and uniform heat transfer make it possible to retain the consistency, colour and succulence of the food when searing and browning.

The following table shows a selection of dishes and is arranged by food type. The temperature and the cooking time depend on the amount, the condition and the quality of the food.

Note: Set up the Flex Zone as a single cooking zone to ensure the function is activated correctly.

	Cookware	Temperature level	Total frying time after the signal tone sounds (min)
Meat			
Escalope, plain[1]	/	4	6 - 10
Fillet[1]	/	4	6 - 10
Chops[1]	/	3	10 - 15
Steak, rare (3 cm thick)[1]	/	5	6 - 8
Steak, medium (3 cm thick)[1]	/	5	8 - 12
Steak, well done (3 cm thick)[1]	/	4	8 - 12
Poultry breast (2 cm thick)[1]	/	3	10 - 20
Bacon[1]	/	3	5 - 8
Hamburgers[1]	/	3	6 - 15
Boiled sausages[1]	/	4	8 - 20
Raw sausages[1]	/	4	8 - 20
Gyros[2]		4	7 - 12
Minced meat[2]		4	6 - 10
Fish and seafood			
Fish fillet, plain[1]	/	4	10 - 20
Scampi[1]	/	4	4 - 8
Prawns[1]	/	4	4 - 8
Frying fish, whole[1]	/	3	15 - 30

[1] Add oil (if necessary) and the food after the signal tone sounds. Turn if necessary.

[2] Add oil (if necessary) and the food after the signal tone sounds. Stir regularly.

[3] Add butter and the food after the signal tone sounds. Turn if necessary.

[4] Add oil (if necessary) and the food after the signal tone sounds. Total cooking time per portion. Fry individually.

[5] Add oil (rub into the food) and the food after the signal tone sounds. Turn if necessary.

[6] Add the food after the signal tone sounds.

	Cookware	Temperature level	Total frying time after the signal tone sounds (min)
Vegetables			
Courgettes[1]	/	3	4 - 12
Aubergines[1]	/	3	4 - 12
Peppers[1]	/	3	4 - 15
Frying green asparagus[1]	/	3	4 - 15
Mushrooms[2]	/	4	10 - 15
Garlic[2]		2	2 - 10
Sweating onions[2]		2	2 - 10
Glazing vegetables[2]		3	6 - 10
Potatoes			
Fried potatoes (made from unpeeled boiled potatoes)[2]		5	6 - 12
Potato pancakes[4]		5	2,5 - 3,5
Glazed potatoes[2]		3	10 - 15
Egg dishes			
Fried eggs in butter[3]		2	2 - 6
Fried eggs in oil[1]		4	2 - 6
Scrambled eggs[2]		2	4 - 9
Omelettes[4]		2	3 - 6
Pancakes[4]		5	1,5 - 2,5
French toast[4]		3	4 - 8
Shredded raisin pancake[4]		3	10 - 15
Miscellaneous			
Toasting[5]	/	4	4 - 6
Croûtons[2]		3	6 - 10
Toasting almonds[6]		4	3 - 15
Toasting nuts[6]		4	3 - 15
Toasting pine nuts[6]		4	3 - 15

[1] Add oil (if necessary) and the food after the signal tone sounds. Turn if necessary.

[2] Add oil (if necessary) and the food after the signal tone sounds. Stir regularly.

[3] Add butter and the food after the signal tone sounds. Turn if necessary.

[4] Add oil (if necessary) and the food after the signal tone sounds. Total cooking time per portion. Fry individually.

[5] Add oil (rub into the food) and the food after the signal tone sounds. Turn if necessary.

[6] Add the food after the signal tone sounds.

Wireless temperature sensor

You will need to connect the wireless temperature sensor to the control panel before using the cooking functions for the first time.

Preparing and maintaining the wireless temperature sensor

This section provides information on:

- Adhering the silicone patch
- Attaching the wireless cooking sensor
- Cleaning
- Changing the battery

The silicone patch and the cooking sensor can be purchased at a later time from specialist retailers, our technical after-sales service or our official website. To do this, quote the relevant reference number:

00577921	Set of 5 silicone patches
HEZ39050	Cooking sensor and set of 5 silicone patches

Adhering the silicone patch

The silicone patch attaches the temperature sensor to the cookware.

When a pan is used for the first time with the cooking functions, the silicone patch must be adhered directly to the pan. It is important

1. That the adhesive area on the pan is free from grease. Clean the pan, dry it thoroughly and wipe the adhesive area with a spirit.
2. Remove the protective film from the silicone patch. Adhere the silicone patch to the outside of the pan in the correct place using the enclosed template as a guide.

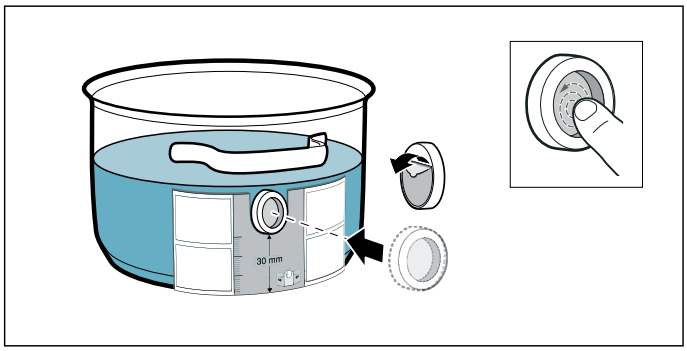

3. Press down all over the surface of the silicone patch, including in the centre.

The adhesive requires one hour to fully harden. Do not use or clean the pan during this time.

Notes

- Do not leave the pan with the silicone patch to soak soapy water for long periods of time.
- If the silicone patch comes off, attach a new one.

Fitting the wireless temperature sensor

Attach the temperature sensor to the silicone patch and align it correctly.

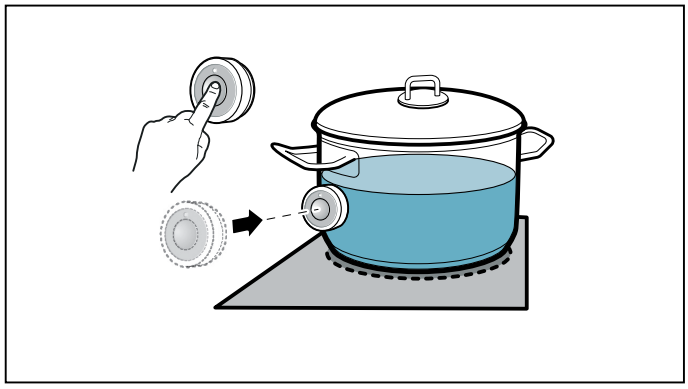

Notes

- Make sure that the silicone patch is completely dry before attaching the temperature sensor.
- Position the cookware in such a way that the temperature sensor is pointing towards the outer side of the hob.
- To prevent overheating, the temperature sensor must not be pointed towards another item of cookware that is hot.
- Remove the temperature sensor from the saucepan after cooking. Store it in a clean, safe place away from sources of heat.
- You can use up to three temperature sensors at the same time.

Connecting the wireless temperature sensor to the control panel

To connect the wireless temperature sensor to the control panel, follow the instructions below:

1. Select the c 14 menu; see the section on → *"Basic settings"*
   The hotplate indicator will light up.
2. Select the hotplate and its indicator will light up. A signal will sound. The indicator will light up.
3. Press the symbol on the wireless temperature sensor within 30 seconds.
   After a few seconds, the status of the connection between the temperature sensor and the control panel will appear on the hotplate's display.

Status	
0	Connected correctly
1	Not connected correctly: Transmission error.
2	Not connected correctly: Temperature sensor fault.

- The cooking functions are made available once the temperature sensor has been connected to the control panel correctly.
- If there is a fault with the temperature sensor, the connection may not be established correctly for the following reasons:
  - Bluetooth communication error.
  - You did not press the symbol on the temperature sensor within 30 seconds of selecting a hotplate.
  - The battery in the temperature sensor has run out.

  Reset the wireless temperature sensor and follow the connection procedure once again.
- If the temperature sensor and the control panel are not connected correctly due to a transmission error, follow the connection procedure once again.
  If the display continues to show incorrect connection !, contact our technical after-sales service.

Resetting the wireless temperature sensor

1. Touch and hold the symbol for approximately 8-10 seconds.
   While you are doing this, the temperature sensor's LED indicator will light up three times. When the LED lights up for the third time, it will start to reset the temperature sensor. At this point, you will need to lift your finger off the symbol.
   Once the LED goes out, this means that the wireless temperature sensor has been reset.
2. Repeat the connection procedure from point 2.

Cleaning

Do not clean the wireless temperature sensor in the dishwasher.

Temperature sensor

Clean the temperature sensor with a damp cloth. Never clean it in the dishwasher. Do not immerse it in water or clean it under running water.

Remove the temperature sensor from the saucepan after cooking. Store it in a clean, safe place (such as in its packaging) away from sources of heat.

Silicone patch

Clean and dry before attaching to the temperature sensor. Dishwasher safe.

Note: Cookware with the silicone patch must not be left to soak for long periods in soapy water.

Temperature sensor window

The sensor window must always be clean and dry. Proceed as follows:

- Remove dirt and oil splatters regularly.
- Use a soft cloth or cotton buds and window cleaner for cleaning.

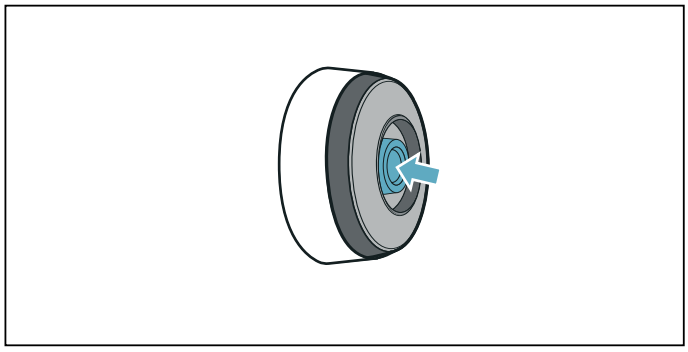

Notes

- Do not use abrasive cleaning agents such as scouring pads, scrubbing brushes or cream cleaners.
- Do not touch the sensor window with your fingers. This may make it dirty or scratch it.

Changing the battery

If the temperature sensor does not light up when the symbol is pressed, the battery is flat.

Changing the battery:

1. Remove the silicone cover from the lower section of the temperature sensor housing and remove both screws using a screwdriver.

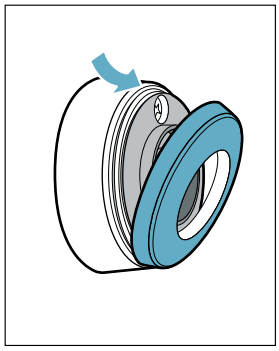

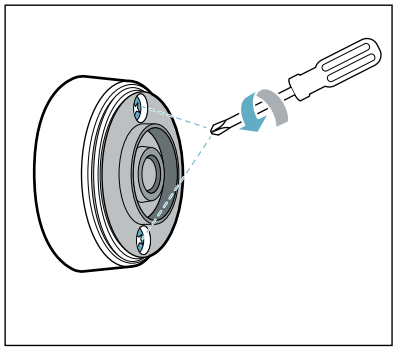

2. Open the closure of the temperature sensor. Remove the battery from the lower section of the housing and insert a new battery (pay attention to the correct orientation of the battery poles).

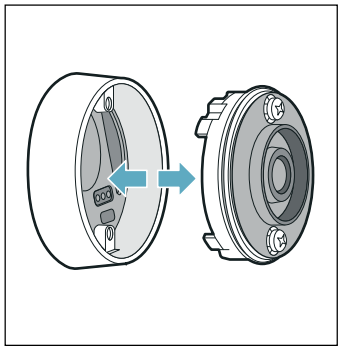

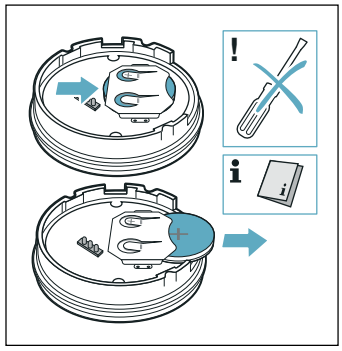

Caution!
Do not use any metal objects to remove the battery. Do not touch the battery connection points.

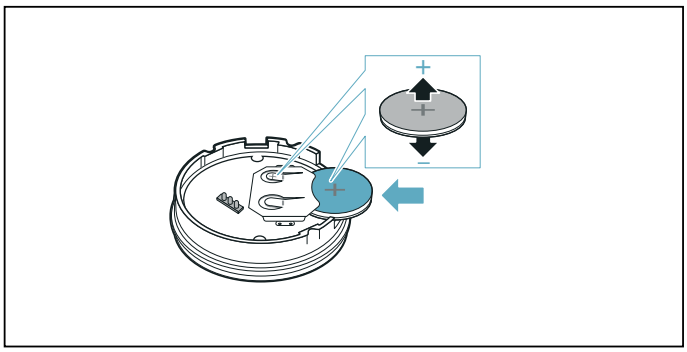

3. Close the closure of the temperature sensor (the notches for the screws on the closure must align with the notches on the lower section of the housing). Tighten the screws with a screwdriver.

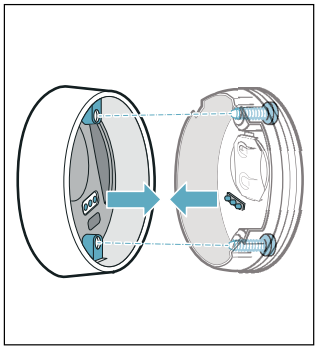

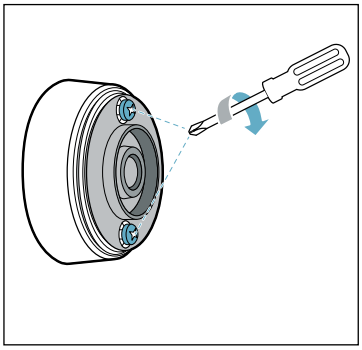

4. Reattach the silicone cover to the lower section of the temperature sensor housing.

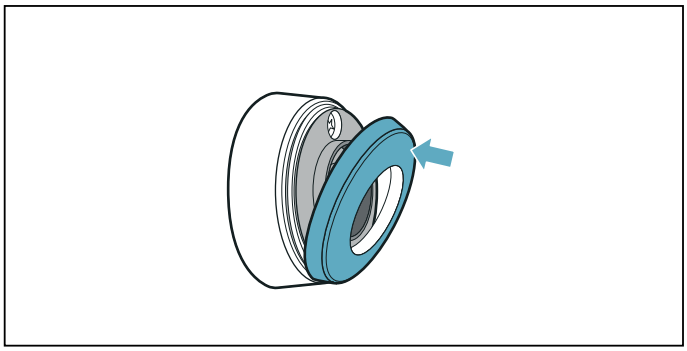

Note: Use only high-quality batteries of the type CR2032 in order to guarantee a long service life.

Declaration of Conformity

Robert Bosch Hausgeräte GmbH hereby declares that the appliance with wireless temperature sensor function meets the basic requirements and other relevant provisions of the Directive 2014/53/EU.

A detailed RED Declaration of Conformity can be found online at www.bosch-home.com/de on the product page for appliance in the additional documents.

The logos and the Bluetooth® brand are registered trademarks and property of Bluetooth SIG, Inc. These trademarks are used by Robert Bosch Hausgeräte GmbH under licence. All other trademarks and brand names are owned by the respective companies.

Childproof lock

You can use the childproof lock to prevent children from switching on the hob.

Activating and deactivating the childproof lock

The hob must be switched off.

To activate:
1. Switch on the hob using the main switch.
2. Touch the symbol for approx. 4 seconds.
   The indicator lights up for 10 seconds.

The hob is locked.

To deactivate:
1. Switch on the hob using the main switch.
2. Touch the symbol for approx. 4 seconds.

The lock is released.

Childproof lock

With this function, the childproof lock automatically activates when a hob is switched off.

Switching on and off

You can find out how to switch the automatic childproof lock on in the → *"Basic settings"* section

Wipe protection

If you wipe over the control panel while the hob is switched on, settings may be altered. To avoid doing this, you can use the hob's "Lock control panel for cleaning" function.

To switch on: Touch the ✋ symbol. An audible signal sounds. The control panel is locked for 35 seconds. You can now wipe over the surface of the control panel without altering any settings.

To deactivate: The control panel will be unlocked once 35 seconds have elapsed. To release the function early, touch the ✋ symbol.

Notes

- An audible signal sounds 30 seconds after activation. This indicates that the function is about to finish.
- The cleaning lock does not lock the main switch. The hob can be switched off at any time.

Automatic safety cut-out

If a hotplate operates for an extended period and no settings are changed, the automatic safety shut-off is activated.

The hotplate stops heating. F8 and the residual heat indicator h or H flash alternately in the hotplate display.

When you touch any symbol, the display switches off. The hotplate can now be set again.

The point at which the safety shut-off becomes active depends on which heat setting has been set (after 1 to 10 hours). .

Basic settings

The appliance has various basic settings. These basic settings can be altered to suit your individual requirements.

Indicator/ symbol	Function
c 1	**Childproof lock** 0 Manual*. 1 Automatic. 2 Function deactivated.
c2	**Signal tones** 0 Confirmation and fault signals are switched off. 1 Only the fault signal is switched on. 2 Only the confirmation signal is switched on. 3 All signal tones are switched on.*
c3	**Display energy consumption** 0 Deactivated.* 1 Activated.
c4	**Setting to account for height above sea level** 1-2 Decrease 3 Basic setting 4 - 9 Expansion
c5	**Automatically programming the cooking time** 00 Switched off.* 0 1-99 Time until automatic switch-off.
c6	**Audible signal duration for the timer function** 1 10 seconds.* 2 30 seconds. 3 1 minute.
c7	**Power management function. Limiting the total power of the hob** **The available settings depend on the maximum power of the hob.** 0 Deactivated. Maximum power of the hob. */** 1 1000 W minimum power. 1. 1500 W ... 3 3000 W recommended for 13 A. 3. 3500 W recommended for 16 A. 4 4000 W 4. 4500 W recommended for 20 A. ... 9 or 9. Maximum power of the hob.**
c 11	**Changing preset power levels for the Move function** _9 Preset power level for the front cooking area. –5 Preset power level for the central cooking area. – 1. Preset power level for the rear cooking area.

c 12	**Check the cookware and the cooking results** 0 Not suitable 1 Not perfect 2 Suitable
c 13	**Configuring activation of the flexible cooking zone** 0 As two independent cooking zones.* 1 As a single cooking zone.
c 14	**Connecting the wireless cooking sensor to the hob** 0 Connected correctly 1 Not connected correctly: Transmission error. 2 Not connected correctly: Temperature sensor fault.
c 17	**Setting air recirculation mode or air extraction mode** 0 Configuring air recirculation mode.* 1 Configuring air extraction mode.
c 18	**Setting the automatic start** 0 Switched off. 1 Switched on: Automatic mode with sensor control.* 2 Switched on: The ventilation system starts at a power level in accordance with the relevant power levels for the cooking zones.
c 19	**Setting sensor sensitivity for the ventilation system** 1 Lowest sensor sensitivity setting. 2 Medium sensor sensitivity setting.* 3 Highest sensor sensitivity setting.
c20	**Setting the run-on** 0 Switched off. 1 Switched on: Automatic function with sensor-controlled run-on. 2 Switched on*: If the hob is working in air extraction mode, the ventilation system switches itself on for approx. six minutes at power level 3. If the hob is working in circulating-air mode, the ventilation system switches itself on for approx. 30 minutes at power level 1. The run-on function automatically switches off after this time.
c25	**Automatic pot detection** 0 Deactivated: Select the required cooking zone manually. 1 Activated: The hob detects the size and the position of the pot and selects the corresponding cooking zone(s)*.
HC	**Home Connect** → *"Home Connect settings"*
c0	**Restore to standard settings** 0 Individual settings.* 1 Restore factory settings.

*Factory setting

**The hob's maximum power output is shown on the rating plate.

To access the basic settings:

The hob must be off.

1. Switch on the hob.
2. Within ten seconds, touch and hold the ⌛ symbol for approximately four seconds.
   The first four displays provide product information.
   Touch the settings area to view the individual displays.

Product information	Display screen
After-sales service index (ASSI)	01
Production number	Fd
Production number 1	95.
Production number 2	05

3. Touching the ⌛ symbol again takes you to the basic settings.
   c 1 and 0 light up as a preset in the displays.

4. Touch the ⌛ symbol repeatedly until the required function is displayed.
5. Then select the required setting from the settings area.

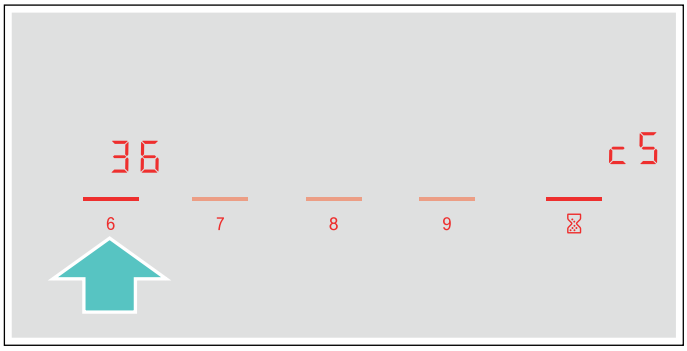

6. Touch the ⌛ symbol for at least four seconds.

The settings have been saved.

Leaving the basic settings

Turn off the hob with the main switch.

Energy consumption indicator

This function indicates the total amount of energy consumed by this hob the last time it was used for cooking.

Once the hob is switched off, the energy consumption is displayed in kilowatt hours (e.g. 1.08 kWh) for 10 seconds.

The accuracy of the information displayed depends on the voltage quality of the mains power supply, among other factors.

You can find out how to switch this function on in the section on → *"Basic settings"*

Cookware check

This function can be used to check the speed and quality of the cooking process depending on the cookware.

The result is a reference value and depends on the properties of the cookware and the hotplate being used.

1. Correctly position the pot with approximately 200 ml of water, at room temperature, on the most suitable cooking zone for the diameter of the bottom of the pot.
2. Go to the basic settings and select the setting c 12.
3. Press the programming area. – flashes in the cooking zone displays.
   The function has now been activated.

After 10 seconds, the cooking result and the speed of the cooking process appear in the visual displays for the cooking zone.

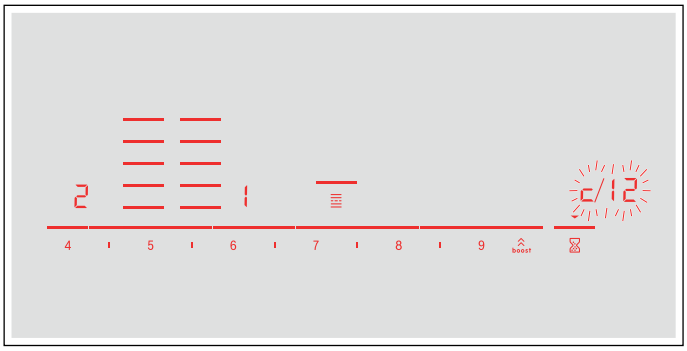

Check the result using the following table:

Result	
0	The cookware is not suitable for the hotplate and will therefore not heat up.*
1	The cookware is taking longer to heat up than expected and the cooking process is not going as well as it should.*
2	The cookware is heating up correctly and the cooking process is going well.

* If there is a smaller hotplate available, test the cookware again on the smaller hotplate.

To reactivate this function, touch the settings range.

Notes

- The flexible cooking zone only counts as a single hotplate; place no more than one item of cookware on it.
- If the diameter of the hotplate used is much smaller than the diameter of the cookware, only the middle of the cookware can be expected to heat up. This may result in the cooking results not being as good as expected or being less than satisfactory.
- You can find information on this function in the section on → *"Basic settings"*.
- You can find information on the type, size and positioning of the cookware in the sections on → *"Induction cooking"* and → *"Flex Zone"*.

Power manager

You can use the power manager to set the total power of the hob.

The hob is preset at the factory. Its maximum performance is specified on the rating plate. You can use the power manager to change the value in accordance with the requirements for the relevant electrical installation.

In order not to exceed this set value, the hob automatically distributes the power available between the cooking zones that are switched on.

As long as the power manager function is activated, the output of a cooking zone may temporarily fall below the nominal value. If a cooking zone is switched on and the power limit is reached, _ appears in the heat setting display for a short time. The appliance automatically regulates and selects the highest possible power level.

For more information about how the total power of the hob is changed, see section → *"Basic settings"*

Home Connect

This appliance is WLAN-enabled and settings can be sent to the appliance via a mobile device.

If the appliance is not connected to the home network, the appliance functions in the same way as a hob with no network connection. The hob can always be operated via the control panel.

The availability of the Home Connect function depends on the availability of Home Connect services in your country. Home Connect services are not available in every country.You can find more information on this at www.home-connect.com.

Notes

- Hobs are not designed to be used unattended - you must always keep an eye on the cooking process.
- Ensure that you follow the safety instructions in this instruction manual and that these are also observed when operating the appliance via the Home Connect app. You must also follow the instructions in the Home Connect app.⟶ *"Important safety information" on page 6*
- Using the Home Connect app, you can send settings to your appliance and then have to confirm them on the appliance. It is not possible to operate the appliance whilst you are away from home.
- Operation on the appliance always has priority. During this time, it is not possible to operate the appliance using the Home Connect app.

Setting up

To implement settings via Home Connect, you must have installed and set up the Home Connect app on your mobile device.

Observe the Home Connect documents supplied for this.

Follow the steps specified by the app to make the settings.

The app must be open in order to perform the setup process.

Automatic registration in the home network

You require a router that has WPS functionality.

You require access to your router.If you do not have this, follow the steps for "Manually logging into your home network".

1. Switch on the hob.
2. Touch and hold the ⌛ symbol for four seconds. The product information is displayed.
3. Touch the ⌛ symbol repeatedly until HC and 1 are displayed alternately. 0 lights up in the cooking position display.

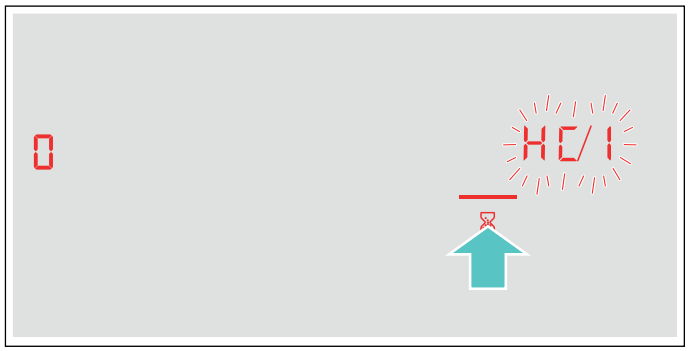

4. Set the 1 value in the control panel. In the control panel, 1 and the symbol 📶 flash.
5. Press the WPS button on the router within the next two minutes. If the 📶 symbol no longer flashes in the control panel but, instead, lights up constantly, the hob is connected to the home network. **Note:** If no connection can be established, the value 2 "Connect manually" appears. Manually log the appliance into the home network or restart the automatic connection. If the appliance automatically tries to connect to the app, HC and 2 are displayed alternately. The value 1 flashes in the settings area.

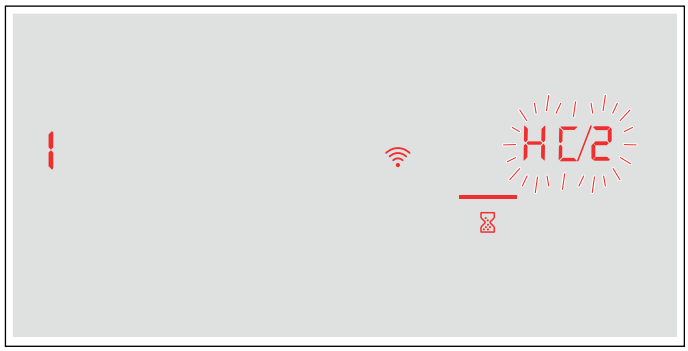

6. Start the app on the mobile device and follow the instructions for automatic network registration.

The registration procedure has been completed once the 0 value appears on the cooking position display.

Manual registration in the home network

1. Switch on the hob.
2. Touch and hold the ⌛ symbol for four seconds.
   The product information is displayed.
3. Touch the ⌛ symbol repeatedly until HC and 1 are displayed alternately.
   0 lights up in the cooking position display.

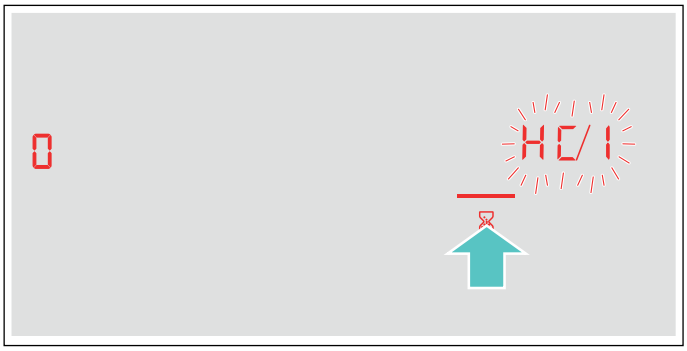

4. Set the 2 value in the control panel.
   In the control panel, 2 and the symbol 📶 flash.

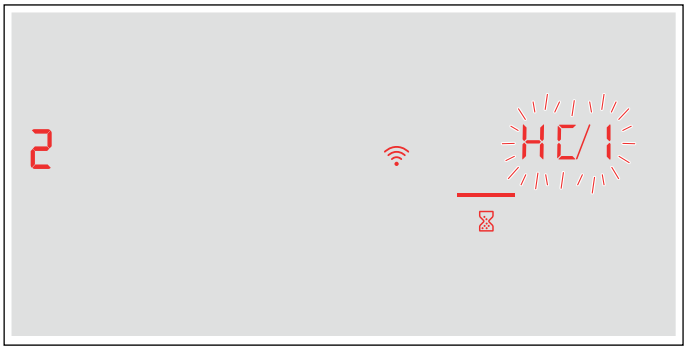

5. Use the "Home Connect" SSID and the "Home Connect" key to log your mobile device into the hob network.

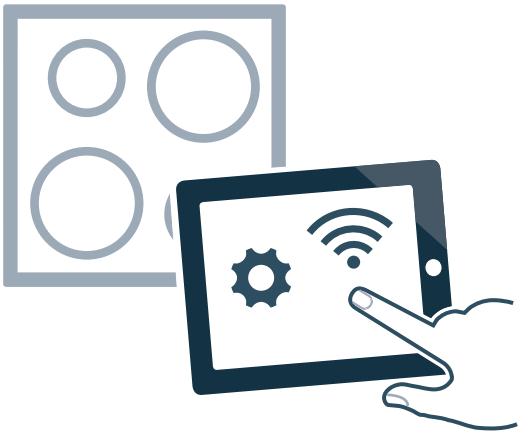

If the 📶 symbol no longer flashes in the control panel but, instead, lights up constantly, the hob is connected to the home network.

If the appliance automatically tries to connect to the app, HC and 2 are displayed alternately. The value 1 flashes in the control panel.

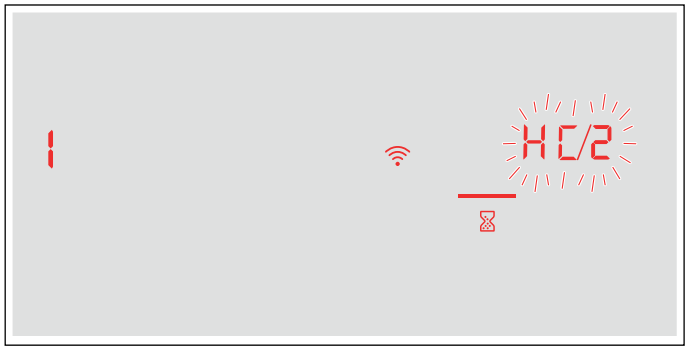

6. Start the app on the mobile device and follow the instructions for manual network registration.

The registration procedure has been completed once the 0 value appears on the cooking position display.

Home Connect settings

You can adjust Home Connect to suit your requirements at any time.

In the basic settings for your hob, navigate to the Home Connect settings to display network and appliance information.

Symbol	Function
HC 1	**Registration in the home network (WLAN)**
0	Not connected /disconnect network.
1	Connect automatically.
2	Connect manually.
3	Connected.
HC2	**Connection to app**
0	Not connected.
1	Connect.
HC3	**Connect to WLAN**
0	Radio module switched off.
1	Radio module switched on.
HC4	**Settings via app**
0	Switched off.
1	Switched on.*
HC5	**Software update**
1	Update available and ready for installation.
2	Starting installation.
HC6	**Remote access by Customer Service**
0	Not permitted.
1	Permitted.

* Basic setting

Symbol	Function
HC7	**WLAN signal strength**
0	Not connected to home network (WLAN).
1	Signal strength 1 (poor)
2	Signal strength 2 (moderate)
3	Signal strength 3 (good)
HC8	**Connection to Home Connect server**
0	Not connected.
1	Connected.
* Basic setting	

Notes

- The HC2 setting is only displayed if the appliance is connected to the home network.
- The HC3 setting is only displayed if the appliance has once connected to a network.
- The HC5 setting is only displayed if an update is available.
- The HC6 setting is only displayed if Customer Service is attempting to connect to the appliance. You can end this at any time after granting access.
- The HC7 and HC8 settings are only displayed if there is a connection to WLAN.

Deactivating Wi-Fi

If Wi-Fi has been activated, you can use the Home Connect functions.

Note: In networked standby mode, your appliance requires a maximum of 2 W.

1. Switch on the hob.
2. Touch and hold the ⌛ symbol for four seconds. The product information is displayed.
3. Touch the ⌛ symbol repeatedly until HC and 3 are displayed alternately.
   1 lights up in the cooking position display.

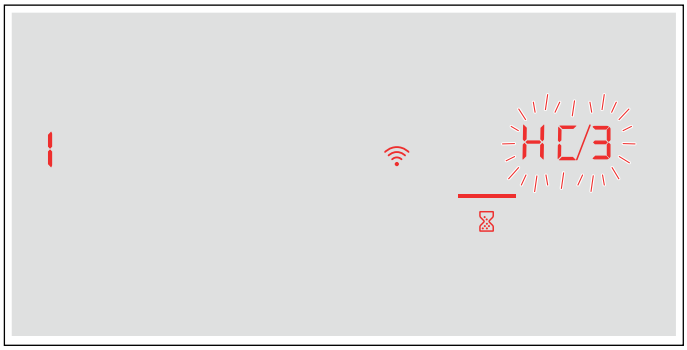

4. Set the 0 value on the control panel.

This deactivates Wi-Fi; the 📶 symbol will go out on the control panel.

Disconnecting from the network

You can disconnect your hob from the network at any time.

Note:
If your hob is disconnected from the network, it is not possible to operate it using Home Connect.

1. Switch on the hob.
2. Touch and hold the ⌛ symbol for four seconds. The product information is displayed.
3. Touch the ⌛ symbol repeatedly until HC and 1 are displayed alternately.
   3 lights up in the cooking position display.
4. Set the 0 value on the control panel.

This disconnects the appliance from your home network; the 📶 symbol will go out on the control panel.

Connecting to the network

1. Switch on the hob.
2. Touch and hold the ⌛ symbol for four seconds. The product information is displayed.
3. Touch the ⌛ symbol repeatedly until HC and 1 are displayed alternately.
   0 lights up in the cooking position display.

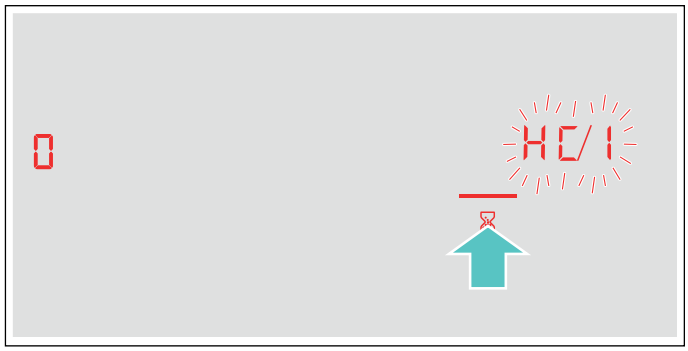

4. On the control panel set the "Connect automatically" 1 value or or the "Connect manually" 2 value.
5. Follow the instructions as per → *"Automatic registration in the home network"* or → *"Manual registration in the home network"*.

Connect to the app

If the Home Connect app is installed on your mobile device, you can connect it to your hob.

Notes

- The appliance must be connected to the network.
- The app must be open and be set up.

1. Switch on the hob.
2. Touch and hold the ⌛ symbol for four seconds. The product information is displayed.
3. Touch the ⌛ symbol repeatedly until HC and 2 are displayed alternately. 0 lights up in the cooking position display.

4. Set the 1 value on the control panel.
5. Follow the instructions in the app to complete the connection process.

Settings via app

You can use the Home Connect app to easily access the basic settings for your hob and send settings to the hob.

Notes

- To change the basic settings, switch off the hob.
- Operating the appliance directly from the appliance always takes priority. You cannot operate the appliance via the Home Connect app during this time.
- The appliance is delivered with the settings transfer option activated.
- If the settings transfer option is deactivated, only the hob's operating status will be displayed in the Home Connect app.

1. Switch on the hob.
2. Touch and hold the ⌛ symbol for four seconds. The product information is displayed.
3. Touch the ⌛ symbol repeatedly until HC and 4 are displayed alternately.
4. To activate the transfer, select the 1 value on the control panel. To deactivate the transfer, select the 0 value.

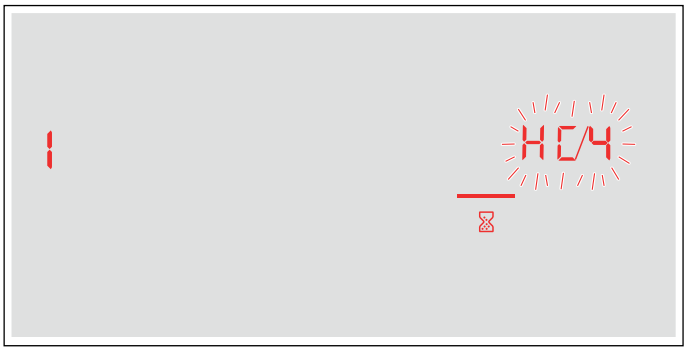

Confirming settings

As soon as cooking settings are transmitted to a cooking zone, the cooking zone display, timer display or modified function starts, depending on the setting. To confirm that you want to use these settings, touch the indicator for the required hotplate. To discard the settings, touch any other button on the hob.

Software update

Using the software update function, your hob's software can be updated (e.g. for the purpose of optimisation, troubleshooting or security updates). To do this, you need to be a registered Home Connect user, have installed the app on your mobile device and be connected to the Home Connect server.

As soon as a software update is available, you will be informed by the Home Connect app, from which you will also be able to download the update.

Once the update has been successfully downloaded, you can start installing it via the hob (basic settings, HCS setting) or the Home Connect app if you are on your local area network.

The Home Connect app will notify you once installation is complete.

Notes

- You can continue to use your hob as normal while updates are downloading.
- Depending on your personal settings in the app, software updates can also be set to download automatically.
- We recommend that you install security updates as soon as possible.

Remote diagnostics

Customer Service can use Remote Diagnostics to access your appliance if you contact them, have your appliance connected to the Home Connect server and if Remote Diagnostics is available in the country in which you are using the appliance.

Note: For further information and details about the availability of Remote Diagnostics in your country, please visit the service/support section of your local website: www.home-connect.com

About data protection

When your appliance is connected for the first time to a WLAN network, which is connected to the Internet, your appliance transmits the following categories of data to the Home Connect server (initial registration):

- Unique appliance identification (consisting of appliance codes as well as the MAC address of the installed WiFi communication module).
- Security certificate of the WiFi communication module (to ensure a secure IT connection).
- The current software and hardware version of your domestic appliance.
- Status of any previous resetting to factory settings.

This initial registration prepares the Home Connect functions for use and is only required when you want to use these Home Connect functions for the first time.

Note: Ensure that the Home Connect functions can be used only in conjunction with the Home Connect app. Information on data protection can be accessed in the Home Connect app.

Declaration of Conformity

Robert Bosch Hausgeräte GmbH hereby declares that the appliance which features Home Connect is in accordance with the basic requirements and the other relevant provisions of the directive 2014/53/EU.

A detailed RED Declaration of Conformity can be found online at www.bosch-home.com/de on the product page for appliance in the additional documents.

CE

2.4 GHz band: max. 100 mW
5 GHz band: max. 100 mW

	BE	BG	CZ	DK	DE	EE	IE	EL
	ES	FR	HR	IT	CY	LV	LT	LU
	HU	MT	NL	AT	PL	PT	RO	SI
	SK	FI	SE	UK	NO	CH	TR	

5 GHz Wi-Fi: for indoor use only

Cleaning

Warning – Risk of burns!
The appliance becomes hot during operation. Allow the appliance to cool down before cleaning.

Warning – Risk of burns!
The appliance becomes hot during operation. If hot liquids penetrate the appliance, leave the appliance to cool before removing the metal grease filter or the overflow container.

Warning – Risk of electric shock!
Do not use any high-pressure cleaners or steam cleaners, which can result in an electric shock.

Warning – Risk of electric shock!
Penetrating moisture may result in an electric shock. Clean the appliance using a damp cloth only. Before cleaning, pull out the mains plug or switch off the circuit breaker in the fuse box.

Warning – Risk of injury!
Components inside the appliance may have sharp edges. Wear protective gloves.

Notes

- Only use a minimal amount of water when cleaning so that no water enters the appliance.
- Before cleaning, remove any jewellery from your arms and hands.
- Do not use any cleaning agents while the hob is still hot. This may mark the surface. Ensure that any residue left by cleaning agents is removed.

Cleaning agents

Only use cleaning products that are suitable for this type of hob. Follow the manufacturer's instructions on the product packaging.

Follow all instructions and warnings included with the cleaning products.

Suitable maintenance and cleaning products can be purchased from the after-sales service or in our e-Shop.

Caution!
Beware of causing surface damage
Do not use:

- Undiluted washing-up liquid
- Cleaning products designed for dishwashers
- Abrasive cleaning products
- Pressure washers or steam jet cleaners
- Oven cleaners
- Corrosive or aggressive cleaners, or those containing chlorine
- Cleaners containing a large percentage of alcohol
- Hard, scratchy sponges, brushes or scouring pads

Caution!
Beware of causing surface damage
Always wash new sponge cloths thoroughly before use.

To ensure that the different surfaces are not damaged by using the wrong cleaning product, follow the instructions in the table.

Area	Cleaning products
Glass ceramic	Glass cleaner for stains due to limescale and water marks: Clean the cooktop as soon as it has cooled down. You can use a cleaning product that is suitable for glass-ceramic hobs or glass cleaner. Glass scraper for stains caused by sugar, rice starch or plastic: Clean immediately. Caution: Risk of burns. Then clean with a damp dish cloth and dry with a cloth. **Note:** Do not use cleaning products designed for dishwashers.
Stainless steel	Hot soapy water: Clean with a dish cloth and dry with a soft cloth. Use a minimal amount of water when cleaning to prevent water from penetrating the appliance. Leave dried-on remains to soak in a small amount of soapy water; do not scour. Clean stainless steel surfaces in the direction of the finish only. Special stainless steel cleaning products are available from our after-sales service, through our online shop or from specialist retailers. Apply a very thin layer of the cleaning product with a soft cloth. **Note:** Do not use a glass scraper to clean the cooktop surround.
Plastic	Hot soapy water: Clean with a soft cloth or in the dishwasher.
Controls	Hot soapy water or an appropriate glass cleaner: Clean using a damp dish cloth and then dry with a soft cloth.

Components to clean

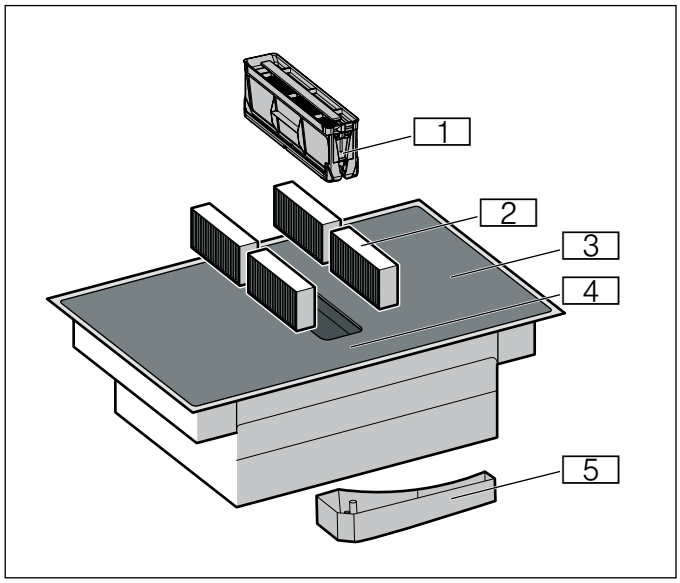

No.	Designation
1	Metal grease filter
2	Activated charcoal filter for air recirculation or acoustics filter for air extraction*
3	Hob
4	Control panel
5	Overflow container

*Depending on the appliance specifications

Hob surround (only on appliances with hob surrounds)

To prevent damage to the hob surround, observe the following instructions:

- Only use warm soapy water
- Wash new dish cloths thoroughly before use.
- Do not use harsh or abrasive cleaning agents.
- Do not use a glass scraper or sharp objects.
- Do not use any hard, scratchy sponges, brushes or scouring pads.

Hob

Clean the hob each time you use it. This will prevent food remnants from becoming burned on. Do not clean the hob until the residual heat indicator has gone out. Remove boiled-over liquids immediately and do not allow any food remnants to dry on.

Leave the metal grease filter in the appliance while you clean the hob. Dirt and food remnants collect in the metal grease filter and not in the appliance interior. You can clean the metal grease filter in the dishwasher.

Clean the hob with a damp dish cloth and dry it with a cloth to prevent limescale build-up.

Stubborn dirt is best removed with a glass scraper or glass ceramic cleaner (available from retailers). Follow the manufacturer's instructions.

You can obtain a suitable glass scraper (article no. 00087670) from our after-sales service or through our online shop.

Using a special sponge for cleaning glass-ceramic hobs achieves great cleaning results.

Ventilation system

The filter must be regularly cleaned or replaced in order to guarantee efficient filtration of odours and grease.

Metal grease filter

The metal grease filter must be cleaned regularly.

⚠ Warning – Risk of fire!
Fatty deposits in the grease filter may catch fire. Regularly clean the grease filter. Never operate the appliance without a grease filter.

Activated charcoal filters

The activated charcoal filter should be replaced regularly. The saturation indicator on your appliance will tell you how frequently this needs to be done.

If you only use your appliance in air extraction mode, change the acoustics filter as soon as it is dirty.

Saturation display

When the activated charcoal filters are saturated, an audible signal sounds after the appliance is switched off.

F lights up on the display.

Do not wait any longer to replace the activated charcoal filters.

If you have replaced the activated charcoal filters, you should reset the saturation indicator so that the F display goes out.

After the appliance has been switched off, F lights up.

Press and hold the symbol for the ventilation system until an audible signal sounds.

The activated charcoal filter saturation indicator has now been reset.

Changing the activated charcoal filter (only in circulating-air mode)

Activated charcoal filters trap the odour-causing compounds in cooking smells. They are only used for circulating-air mode.

Notes

- The activated charcoal filters and acoustics filters are included with the appliance. When the activated charcoal filters or acoustics filters need to be replaced, they can be obtained from specialist retailers, from our after-sales service or from our online shop.
- The activated charcoal filters and acoustics filters cannot be cleaned or reactivated.
- Only use genuine replacement filters. This will ensure that the appliance performs optimally.

1. Remove the metal grease filter.

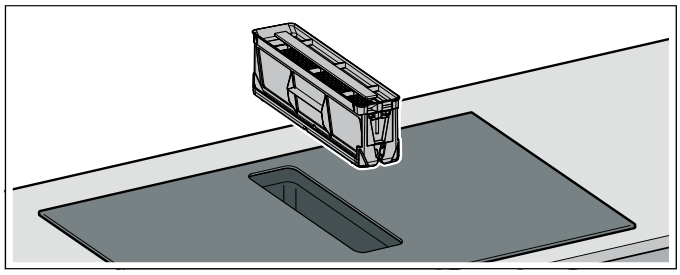

   Notes
   - Grease may accumulate in the bottom of the container. Hold the metal grease filter level to prevent grease from dripping out.
   - Make sure that the metal grease filter does not fall and damage the cooktop.
2. Remove the four activated charcoal filters or acoustics filters and dispose of them properly.

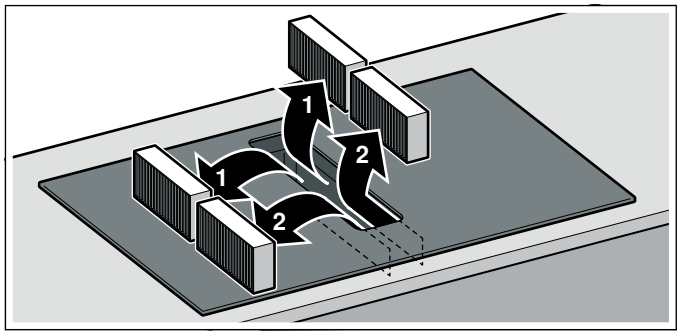

3. Insert two of the activated charcoal filters or acoustics filters into the left and right of the appliance and slide them forwards.

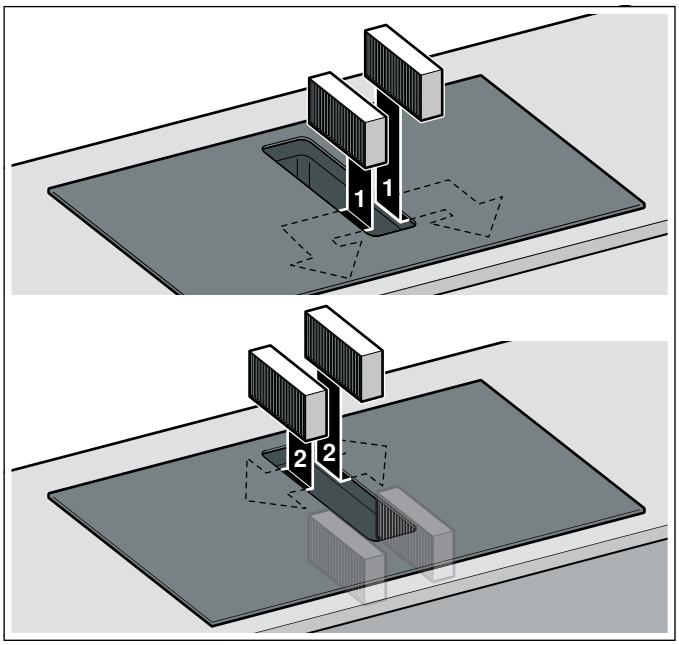

4. Insert the other activated charcoal filters or acoustics filters into the left and right of the appliance.
5. Insert the metal grease filter.

Resetting the saturation displays

If you have replaced the activated charcoal filters, you should reset the saturation indicator so that the F display goes out.

After the appliance has been switched off, F lights up.

Press and hold the symbol for the ventilation system until an audible signal sounds.

The activated charcoal filter saturation indicator has now been reset.

Removing metal grease filter

The metal grease filters filter the grease out of kitchen steam. To keep it in good working order, the metal grease filter must be cleaned regularly.

Also clean the inside of the hob extractor system regularly. You can use a special degreaser to remove stubborn dirt.

1. Remove the metal grease filter.

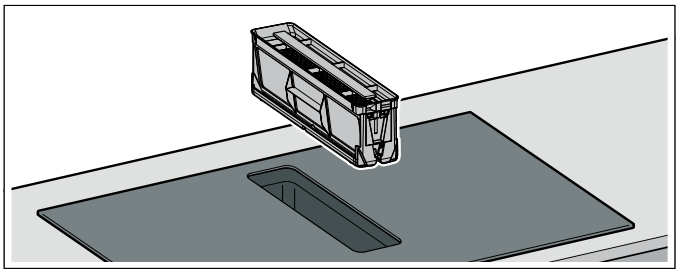

Notes

- Grease may accumulate in the bottom of the container. Hold the metal grease filter level to prevent grease from dripping out.
- Make sure that the metal grease filter does not fall and damage the cooktop.

2. Clean the metal grease filters in the dishwasher or with hot soapy water.⟶ *"Cleaning the metal grease filter" on page 55*
3. If required, after removing the metal grease filter, remove the activated charcoal filter and clean the appliance from the inside.
4. After cleaning, reinsert the dried metal grease filter.

Cleaning the metal grease filter

Notes

- Do not use aggressive, acidic or alkaline cleaning products.
- The metal grease filter can be cleaned in the dishwasher or by hand.

By hand:

Note: You can use a special degreaser to remove stubborn dirt. It can be ordered via the online shop.

- Remove the metal grease filter.

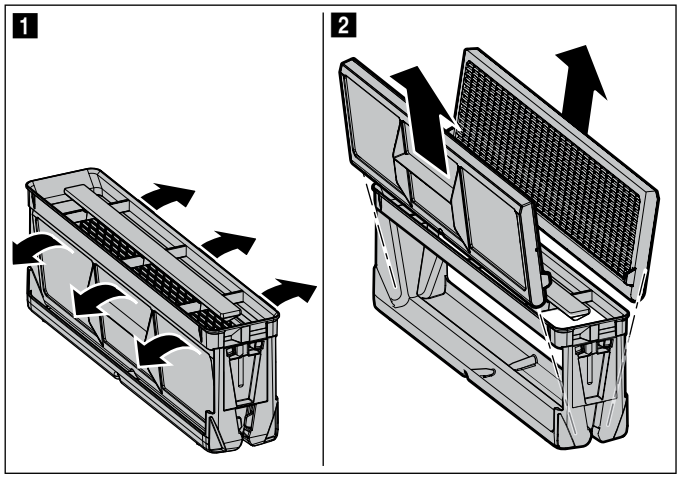

- Soak the metal grease filter in hot soapy water.
- Clean the metal grease filter with a brush and then rinse it thoroughly.
- Leave the metal grease filter to drain.

In the dishwasher:

- Do not clean the metal grease filter together with cookware if heavily soiled.
- Place the metal grease filter in the dishwasher, leaving plenty of space around it. Do not trap the metal grease filter.
- For best results, place the metal grease filter in the dishwasher filter side down.

Cleaning the overflow container

1. Unscrew the overflow container with both hands.
   Note: Hold the overflow container level to prevent liquid from leaking out.

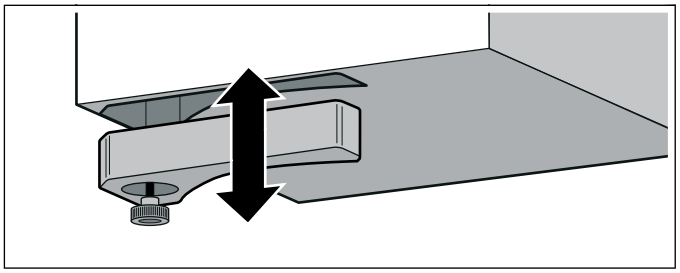

2. Empty the overflow container and rinse it out.
3. If necessary, unscrew the screw and clean the overflow container without the screw in the dishwasher.
4. Clean the overflow container before screwing it back into place.

Notes

- Ensure that the supply to the overflow container is not blocked. Once it has cooled down, remove any objects that have entered the appliance. To do this, remove the metal grease filter.
- If liquid gets into the appliance from above, this is collected in the overflow container. Unscrew the overflow container and empty it.

Frequently Asked Questions (FAQ)

Using the appliance

Why can I not switch on the hob and why is the childproof lock symbol lit?

The childproof lock is now active.
You can find information about this function in the section entitled ⟶ *"Childproof lock"*.

Why are the illuminated displays flashing and why is a signal sounding?

Remove any liquid or remnants of food from the control panel. Remove any objects from the control panel.
You can find out how to deactivate the audible signal in the section entitled ⟶ *"Basic settings"*.

Why can I not activate the cooking assistance functions?

The appliance has reached its maximum power consumption or the power manager function has been activated. Switch off or reduce the power levels of the active cooking zones.
You can find further information about this function in the section entitled ⟶ *"Cooking assist functions"*.

The ventilation system does not switch on even though the automatic start is set.

Switch on the ventilation system manually or check the configuration of the automatic mode. You can find additional information about this in the section entitled ⟶ *"Basic settings"*.

The ventilation system runs with too much or too little power in sensor control mode.

The sensor sensitivity for the ventilation system is incorrectly configured.
You can find additional information about this setting in the section entitled ⟶ *"Basic settings"*.

The ventilation system remains on even though the cooking zones have been switched off.

Manually switch off the ventilation system.
You can find additional information about this setting in the section entitled ⟶ *"Operating the appliance"*.

The ventilation system switches on even though the appliance is switched off.

The run-on function with sensor control is selected.
You can find additional information about this setting in the section entitled ⟶ *"Basic settings"*.

The air intake is too weak.

Ensure that the metal grease filter is clean.
To find out how to clean and replace the filter, refer to the section entitled ⟶ *"Cleaning"*.

Noises

Why I can hear noises while I'm cooking?

Noises may be generated while using the hob depending on the base material of the cookware. These noises are a normal part of induction technology. They do not indicate a defect.

Possible noises:

A low humming noise like the one a transformer makes:

Occurs when cooking at a high heat setting. The noise disappears or becomes quieter when the heat setting is reduced.

Low whistling noise:

Occurs when the cookware is empty. This noise disappears when water or food is added to the cookware.

Crackling:

Occurs when using cookware made from different layers of material or when using cookware of different sizes and different materials at the same time. The loudness of the noise can vary depending on the quantity of food being cooked or the cooking method.

Noises

High-pitched whistling noises:

Can occur when two hotplates are used at the highest heat setting at the same time. The whistling noises disappear or become quieter when the heat setting is reduced.

Fan noise:

The hob is equipped with a fan that switches on automatically at high temperatures. The fan may continue to run even after you have switched off the hob if the temperature detected is still too high.

Cookware

Which types of cookware can be used with an induction hob?

You can find information on which types of cookware can be used with an induction hob in the section on ⟶ *"Induction cooking"*.

Why is the hotplate not heating up and why is the heat setting flashing?

The hotplate on which the cookware is standing is not switched on.
Check that you have switched on the correct hotplate.

The cookware is too small for the hotplate that is switched on or it is not suitable for induction cooking.
Check that the cookware is suitable for induction cooking and that it is placed on the hotplate that best corresponds to its size. You can find information on the type, size and positioning of cookware in the sections on ⟶ *"Induction cooking"*, ⟶ *"Flex Zone"* and ⟶ *"Move function"*.

Why is it taking so long for the cookware to heat up or why is it not heating up sufficiently despite being on a high heat setting?

The cookware is too small for the hotplate that is switched on or it is not suitable for induction cooking.
Check that the cookware is suitable for induction cooking and that it is placed on the hotplate that best corresponds to its size. You can find information on the type, size and positioning of cookware in the sections on ⟶ *"Induction cooking"*, ⟶ *"Flex Zone"* and ⟶ *"Move function"*.

Cleaning

How do I clean the induction hob?

Optimal results can be achieved with cleaning products specifically for use on glass-ceramic surfaces. Do not use harsh or abrasive cleaning products, dishwasher detergents (concentrates) or floor cloths.
To find out how to clean and care for the hob, refer to the section entitled ⟶ *"Cleaning"*.

There is water in the cabinet underneath the hob.

Check whether the overflow container is full.
To find out how to clean the overflow container, refer to the section entitled ⟶ *"Cleaning"*.

How often do I need to clean the overflow container?

Clean the overflow container frequently.
To find out how to clean the overflow container, refer to the section entitled ⟶ *"Cleaning"*.

How often do I need to clean the metal grease filter?

Clean the metal grease filter regularly.
To find out how to clean and care for the filter, refer to the section entitled ⟶ *"Cleaning"*.

Trouble shooting

Usually, faults are small matters that are easy to eliminate. Please read the information in the table before calling the after-sales service.

Display	Possible cause	Solution
None	The power supply has been disconnected.	Use other electrical appliances to check whether the power supply has been interrupted.
	The appliance has not been connected as shown in the circuit diagram.	Ensure that the appliance has been connected as shown in the circuit diagram.
	Electronics fault.	If the fault cannot be rectified, inform the technical after-sales service.
The displays flash.	The control panel is damp or there is something on it.	Dry the control panel or remove the object.
The – display flashes in the cooking zone displays.	A fault has occurred in the electronics.	To acknowledge the fault, briefly cover the control panel with your hand.
F	The activated charcoal filter is saturated or the saturation indicator lights up even though the filter has been cleaned or replaced.	Change the filter and reset the filter saturation indicator. You can find additional information about this in the section entitled ⟶ *"Cleaning"*.
F2 / E8207 / E7015	The electronics have overheated and have switched off the affected cooking zone.	Wait until the electronics have cooled down sufficiently. Then touch any symbol on the hob.
F4 / E8208 / E7015	The electronics have overheated and all of the cooking zones have been switched off.	
F5 + power level and audible signal	There is hot cookware near the control panel. There is a risk that the electronics will overheat.	Remove the cookware that is causing the problem. The fault code goes out shortly afterwards. You can continue cooking.
F5 and audible signal	There is hot cookware near the control panel. The cooking zone has been switched off to protect the electronics.	Remove the cookware that is causing the problem. Wait a few seconds. Touch any touch control. When the fault indicator goes out, you can continue cooking.
F1 / F6	The cooking zone has overheated and has been switched off to protect the work surface.	Wait until the electronics have cooled down sufficiently. Then switch the cooking zone on again.
F0	The transfer settings function cannot be activated.	Confirm the fault display by touching any sensor. You can cook without using the settings transfer function. Contact our technical after-sales service.
F8	The cooking zone has been operating continuously for an extended period.	The automatic safety cut-out function has been activated. You can find additional information about this in the section entitled .
E7010	The hob is unable to connect to your home network.	Confirm the fault display by touching any sensor. You can cook without the connection. If the message appears again, contact our technical after-sales service.
E8202	The cooking sensor has overheated and the cooking zone has been switched off.	Wait until the cooking sensor has cooled down sufficiently before activating the function again.
E8203	The cooking sensor has overheated and all of the cooking zones have been switched off.	If you are not using the cooking sensor, remove it from the cookware and keep it away from other cooking zones or heat sources. Switch on the cooking zones.
E8204	The battery in the cooking sensor is almost flat.	Replace the 3 V CR2032 battery. For more information, see the section entitled ⟶ *"Changing the battery"*.
E8205	The connection to the cooking sensor has been broken.	Switch the function off and then on again.
E8206	The cooking sensor is broken/faulty.	Contact our technical after-sales service.

Do not place hot cookware on the control panel.

Display	Possible cause	Solution
The cooking sensor indicator does not light up.	The cooking sensor is not responding and the indicator does not light up.	Replace the 3 V CR2032 battery. For more information, see the section entitled ⟶ *"Changing the battery"*. If this does not solve the problem, press and hold the symbol on the cooking sensor for 8–10 seconds and then reconnect the cooking sensor to the hob. For more information, see the section entitled ⟶ *"Connecting the wireless temperature sensor to the control panel"*. If the problem persists, contact our technical after-sales service.
The indicator on the sensor flashes twice.	The battery in the cooking sensor is almost flat. You may be interrupted the next time you cook by the battery running out.	Replace the 3 V CR2032 battery. For more information, see the section entitled ⟶ *"Changing the battery"*.
The indicator on the sensor flashes three times.	The connection to the cooking sensor has been broken.	Press and hold the symbol on the cooking sensor for 8–10 seconds and then reconnect the cooking sensor to the hob. For more information, see the section entitled ⟶ *"Connecting the wireless temperature sensor to the control panel"*.
E9000 E9010	The operating voltage is incorrect and outside of the normal operating range.	Contact your electricity supplier.
U400	The hob is not connected correctly.	Disconnect the hob from the mains. Ensure that the hob has been connected as shown in the circuit diagram.
dE	Demo mode is activated.	Disconnect the hob from the mains. Wait for 30 seconds before reconnecting it. Touch any sensor in the next three minutes. Demo mode has now been deactivated.
Do not place hot cookware on the control panel.		

Notes

- If E appears on the display, press and hold the button for the relevant cooking zone in order to read the fault code.
- If the fault code is not listed in the table, disconnect the hob from the mains power supply and wait 30 seconds before reconnecting it. If this code is displayed again, contact the technical after-sales service and specify which fault code has appeared.
- If a fault occurs, the appliance will not switch to standby mode.

Customer service

Our after-sales service is there for you if your appliance needs to be repaired. We will always find an appropriate solution, also in order to avoid after-sales personnel having to make unnecessary visits.

Product number (E no.) and production number (FD no.)

When contacting our after-sales service, always quote the product number (E no.) and the production number (FD no.) of the appliance.

The rating plate bearing these numbers can be found:

- On the appliance certificate.
- On the front underside of the hob.

The product number (E no.) can be found on the glass-ceramic hob. You can see the after-sales service index (KI) and production number (FD no.) by going to the basic settings. See section → *"Basic settings"*.

Please note that a visit from an after-sales service engineer is not free of charge in the event that the appliance has been misused, even during the warranty period.

Please find the contact data of all countries in the enclosed customer service list.

To book an engineer visit and product advice

GB 0344 892 8979
Calls charged at local or mobile rate.

IE 01450 2655
0.03 € per minute at peak. Off peak 0.0088 € per minute.

Rely on the professionalism of the manufacturer. You can therefore be sure that the repair is carried out by trained service technicians who carry original spare parts for your appliances.

Test dishes

This table has been produced for test institutes to facilitate the testing of our appliances.

The data in the table refers to our Schulte-Ufer cookware accessories (4 piece cookware set for the HEZ 390042 induction hob) with the following measurements:

- Saucepan Ø 16 cm, 1.2 l for hotplates of Ø 14.5 cm
- Pot Ø 16 cm, 1.7 l for hotplates of Ø 14.5 cm
- Pot Ø 22 cm, 4.2 l for hotplates of Ø 18 cm
- Frying pan Ø 24 cm, for hotplates of Ø 18 cm

Test dishes	Cookware	Preheating			Cooking	
		Heat setting	Cooking time (min:sec)	Lid	Heat setting	Lid
Melting chocolate Chocolate coating (e.g. Dr. Oetker brand, dark chocolate 55% cocoa, 150 g)	Saucepan, 16 cm diameter	-	-	-	1.5	No
Heating and keeping lentil stew warm Lentil stew* Initial temperature 20 °C						
Amount: 450 g	Cooking pot, 16 cm diameter	9	1:30 (without stir-ring)	Yes	1.5	Yes
Amount: 800 g	Saucepan, 22 cm diameter	9	2:30 (without stir-ring)	Yes	1.5	Yes
Lentil stew from a tin E.g lentils with Erasco sausages. Initial temperature 20 °C						
Amount: 500 g	Cooking pot, 16 cm diameter	9	Approx. 1:30 (stir after approx. 1 minute)	Yes	1.5	Yes
Amount: 1 kg	Saucepan, 22 cm diameter	9	Approx. 2:30 (stir after approx. 1 minute)	Yes	1.5	Yes
Preparing Béchamel sauce Temperature of the milk: 7 °C Ingredients: 40 g butter, 40 g flour, 0.5 l milk (3.5% fat content) and a pinch of salt						
1. Melt the butter, stir in the flour and salt, and heat up the mixture.	Saucepan, 16 cm diameter	2	Approx. 6:00	No	-	-
2 Add the milk to the roux and bring to the boil, stirring continu-ously.		7	Approx. 6:30	No	-	-
3. Once the Béchamel sauce comes to the boil, leave it on the hot-plate for a further two minutes, stirring continuously.		-	-	-	2	No

*Recipe in accordance with DIN 44550
**Recipe in accordance with DIN EN 60350-2

Test dishes	Cookware	Preheating Heat setting	Preheating Cooking time (min:sec)	Preheating Lid	Cooking Heat setting	Cooking Lid
Cooking rice pudding Rice pudding, cooked with the lid on Temperature of the milk: 7 °C Heat the milk until it starts to rise up. Set the recommended heat setting and add rice, sugar and salt to the milk. The cooking time, including preheating, is approx. 45 minutes.						
Ingredients: 190 g short-grain rice, 90 g sugar, 750 ml milk (3.5% fat content) and 1 g salt	Cooking pot, 16 cm diameter	8.5	Approx. 5:30	No	3 (stir after 10 minutes)	Yes
Ingredients: 250 g short-grain rice, 120 g sugar, 1 l milk (3.5% fat content) and 1.5 g salt	Saucepan, 22 cm diameter	8.5	Approx. 5:30	No	3 (stir after 10 minutes)	Yes
Rice pudding, cooked without lid Temperature of the milk: 7 °C Add the ingredients to the milk and heat the mixture up while stirring continuously. Once the milk has reached approx. 90 °C, select the recommended heat setting and leave it to simmer on a low heat for approx. 50 minutes.						
Ingredients: 190 g short-grain rice, 90 g sugar, 750 ml milk (3.5% fat content) and 1 g salt	Cooking pot, 16 cm diameter	8.5	Approx. 5:30	No	3	No
Ingredients: 250 g short-grain rice, 120 g sugar, 1 l milk (3.5% fat content) and 1.5 g salt	Saucepan, 22 cm diameter	8.5	Approx. 5:30	No	2.5	No
Cooking rice* Water temperature: 20 °C						
Ingredients: 125 g long grain rice, 300 g water and a pinch of salt	Cooking pot, 16 cm diameter	9	Approx. 2:30	Yes	2	Yes
Ingredients: 250 g long grain rice, 600 g water and a pinch of salt	Saucepan, 22 cm diameter	9	Approx. 2:30	Yes	2.5	Yes
Roasting a pork loin Initial temperature of the loin: 7 °C						
Amount: 3 pork loins (total weight approx. 300 g, 1 cm thick) and 15 ml sunflower oil	Frying pan, 24 cm diameter	9	Approx. 1:30	No	7	No
Preparing pancakes**						
Amount: 55 ml batter for each pancake	Frying pan, 24 cm diameter	9	Approx. 1:30	No	7	No
Deep-fat frying chips						
Amount: 2 l sunflower oil, per portion: 200 g frozen chips (e.g. McCain 123 Original fries)	Saucepan, 22 cm diameter	9	Until the oil temperature reaches 180 °C	No	9	No

*Recipe in accordance with DIN 44550
**Recipe in accordance with DIN EN 60350-2

Thank you for buying a Bosch Home Appliance!

Register your new device on MyBosch now and profit directly from:

- **Expert tips & tricks for your appliance**
- **Warranty extension options**
- **Discounts for accessories & spare-parts**
- **Digital manual and all appliance data at hand**
- **Easy access to Bosch Home Appliances Service**

Free and easy registration – also on mobile phones:
www.bosch-home.com/welcome

Looking for help? You´ll find it here.

Expert advice for your Bosch home appliances, need help with problems or a repair from Bosch experts.
Find out everything about the many ways Bosch can support you:
www.bosch-home.com/service
Contact data of all countries are listed in the attached service directory.

Robert Bosch Hausgeräte GmbH
Carl-Wery-Straße 34
81739 München
Germany
www.bosch-home.com

9001469461
000120(01)