iQ300, Condenser tumble dryer, 8 kg
WT45N202GB

B

iSensoric condenser dryer with sensor-controlled autoDry technology and softDry drum for optimal textile care.

- ✓ AutoDry – Gentle and precise drying that protects your clothes.
- ✓ Outdoor programme – Dry your waterproof and outdoor clothing safely.
- ✓ 40 minute quick dry programme (Rapid 40).
- ✓ drumLight for an ideal illumination of the drum interior.
- ✓ softDry drum system for extremely gentle drying

Optional accessories

WZ20400	Stacking kit with pull-out shelf
WZ11410	Stacking kit

Features

Technical Data

Construction type : Free-standing
Removable work top : No
Door hinge : Right
Length of electrical supply cord : 145.0 cm
Height of removable worktop : 842 mm
Dimensions of the product : 842 x 598 x 599 mm
Net weight : 41.310 kg
EAN code : 4242003873762
Connection rating : 2600 W
Fuse protection : 13 A
Voltage : 220-240 V
Frequency : 50 Hz
Approval certificates : CE, E17D UKCA marking, VDE
Capacity cotton - NEW (2010/30/EC) : 8.0 kg
Energy efficiency rating : B
Energy consumption electric dryer, full load - NEW (2010/30/EC) : 4.63 kWh
Standard cotton programme time at full load : 137 min
Energy consumption electric dryer, partial load - NEW (2010/30/EC) : 2.61 kWh
Standard cotton programme time at partial load : 79 min
Weighted annual energy consumption, electric dryer - NEW (2010/30/EC) : 560.0 kWh/annum
Weighted programme time : 104 min
Average condensation efficiency full load (%) : 88 %
Average condensation efficiency partial load (%) : 88 %
Weighted condensation efficiency (%) : 88 %

4 242003 873762

iQ300, Condenser tumble dryer, 8 kg
WT45N202GB

Features

Performance

Programmes/functions
- Fully electronic control dial for sensor and timed programmes
- Touch control buttons: low heat, less ironing, programme length, fine-tuning for drying level, 24 h end time delay, less ironing, fine-tuning for drying level, low heat, programme length, end time delay, Start / Reload / Pause
- Special programmes: Woollens Finish, mixed fabrics, outdoor, timed programmme warm, timed programme cold, hygiene, lingerie, rapid 40, shirts 15

Key features
- Sensitive drying: large softDry stainless steel drum system and revolution drying system
- AntiVibration design: for greater stability and quietness

Additional features
- LED Display for remaining time and 24 hours time delay, programme status indication, special functions
- Anti crease cycle 120 minutes at the end of the programme
- Drum interior light
- Child lock
- End of cycle buzzer
-
- Door hinge: right-hand
- Container for condensed water

Technical Information
- Slide-under installation
- Glass door,, grey, white
- Dimensions (H X W X D): 84.2 x 59.8 x 65.2 cm
- Fully electronic control dial for sensor drying, including timed and special programmes
- Metal door catch
- Electronic Humidity Control
- Energy Efficiency Class[1]: B
- Energy[2]: 560 kWh
- Capacity: 1 - 8 kg
- Programme time[3]: 137 min
- Noise level: 65 dB (A) re 1 pW
- Condensation efficiency class[4]: B
- Condensation efficiency[5]: 88 %

[1] At a range of energy efficiency classes from A+++ to D
[2] Energy consumption kWh per year, based on 160 drying cycles of the standard cotton programme at full and partial load, and the consumption of the low power modes
[3] Programme time of the standard cotton programme at full load
[4] On a condensation efficiency class scale from A to G
[5] Weighted condensation efficiency for the standard cotton programme at full and partial load

iQ300, Condenser tumble dryer, 8 kg
WT45N202GB
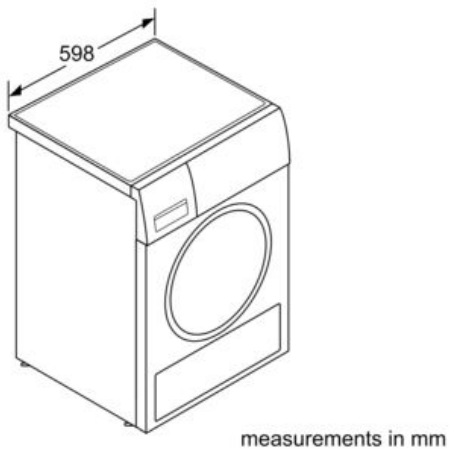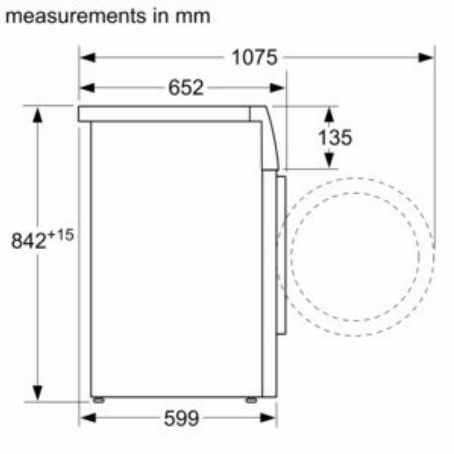
Dimensioned drawings