BOSCH

Register your new device on MyBosch now and get free benefits:
bosch-home.com/welcome

MyBosch

Double oven

MBA5785.6B

[en] User manual and installation instructions

Table of contents

USER MANUAL

1 Safety ... 2
2 Preventing material damage ... 4
3 Environmental protection and saving energy ... 5
4 Familiarising yourself with your appliance ... 6
5 Accessories ... 10
6 Before using for the first time ... 11
7 Basic operation ... 12
8 Time-setting options ... 12
9 Meat thermometer ... 14
10 Programme ... 15
11 Childproof lock ... 18
12 Rapid heating ... 18
13 Sabbath mode ... 18
14 Basic settings ... 19
15 Home Connect ... 20
16 Cleaning and servicing ... 22
17 Pyrolytic self-cleaning ... 23
18 Shelf supports ... 25
19 Appliance door ... 27
20 Troubleshooting ... 34
21 Disposal ... 35
22 Customer Service ... 36
23 How it works ... 36

24 INSTALLATION INSTRUCTIONS ... 41
24.1 General installation instructions ... 41

⚠ 1 Safety

Observe the following safety instructions.

1.1 General information

- Read this instruction manual carefully.
- Keep the instruction manual and the product information safe for future reference or for the next owner.
- Do not connect the appliance if it has been damaged in transit.

1.2 Intended use

This appliance is designed only to be built into kitchen units. Read the special installation instructions.
Only a licensed professional may connect appliances without plugs. Damage caused by incorrect connection is not covered under the warranty.
Only use this appliance:

- To prepare meals and drinks.
- In private households and in enclosed spaces in a domestic environment.
- Up to an altitude of max. 4000 m above sea level.

1.3 Restriction on user group

This appliance may be used by children aged 8 or over and by people who have reduced physical, sensory or mental abilities or inadequate experience and/or knowledge, provided that they are supervised or have been instructed on how to use the appliance safely and have understood the resulting dangers.
Children must not play with the appliance.
Children must not perform cleaning or user maintenance unless they are at least 15 years old and are being supervised.
Keep children under the age of 8 years away from the appliance and power cable.

1.4 Safe use

Always place accessories in the cooking compartment the right way round.
→ *"Accessories", Page 10*

⚠ WARNING – Risk of fire!

Combustible objects that are left in the cooking compartment may catch fire.

- ▶ Never store combustible objects in the cooking compartment.
- ▶ If smoke is emitted, the appliance must be switched off or the plug must be pulled out and the door must be held closed in order to stifle any flames.

Loose food remnants, fat and meat juices may catch fire.

- ▶ Before using the appliance, remove the worst of the food residues and remnants from the cooking compartment, heating elements and accessories.

Opening the appliance door creates a draught. Greaseproof paper may come into contact with the heating element and catch fire.

- Never place greaseproof paper loosely over accessories when preheating the appliance and while cooking.
- Always cut greaseproof paper to size and use a plate or baking tin to hold it down.

⚠ WARNING – Risk of burns!

The appliance and its parts that can be touched become hot during use.

- Caution should be exercised here in order to avoid touching heating elements.
- Young children under 8 years of age must be kept away from the appliance.

Accessories and cookware get very hot.

- Always use oven gloves to remove accessories or cookware from the cooking compartment.

When the cooking compartment is hot, any alcoholic vapours inside may catch fire.

- Only use small quantities of drinks with a high alcohol content in food.
- Open the appliance door carefully.

⚠ WARNING – Risk of scalding!

The accessible parts of the appliance become hot during operation.

- Never touch these hot parts.
- Keep children at a safe distance.

Hot steam may escape when you open the appliance door. Steam may not be visible, depending on the temperature.

- Open the appliance door carefully.
- Keep children at a safe distance.

If there is water in the cooking compartment when it is hot, this may create hot steam.

- Never pour water into the cooking compartment when the cooking compartment is hot.

⚠ WARNING – Risk of injury!

Scratched glass in the appliance door may develop into a crack.

- Do not use any harsh or abrasive cleaners or sharp metal scrapers to clean the glass on the oven door, as they may scratch the surface.

The hinges on the appliance door move when the door is opened and closed, which could trap your fingers.

- Keep your hands away from the hinges.

Components inside the appliance door may have sharp edges.

- Wear protective gloves.

⚠ WARNING – Risk of electric shock!

Incorrect repairs are dangerous.

- Repairs to the appliance should only be carried out by trained specialist staff.
- Only use genuine spare parts when repairing the appliance.
- If the power cord of this appliance is damaged, it must be replaced by trained specialist staff.

If the insulation of the power cord is damaged, this is dangerous.

- Never let the power cord come into contact with hot appliance parts or heat sources.
- Never let the power cord come into contact with sharp points or edges.
- Never kink, crush or modify the power cord.

An ingress of moisture can cause an electric shock.

- Do not use steam- or high-pressure cleaners to clean the appliance.

If the appliance or the power cord is damaged, this is dangerous.

- Never operate a damaged appliance.
- Never operate an appliance with a cracked or fractured surface.
- Never pull on the power cord to unplug the appliance. Always unplug the appliance at the mains.
- If the appliance or the power cord is damaged, immediately unplug the power cord or switch off the fuse in the fuse box.
- Call customer services. → *Page 36*

⚠ WARNING – Danger: Magnetism!

Permanent magnets are used in the control panel or in the controls. These may affect electronic implants, e.g. heart pacemakers or insulin pumps.

- Wearers of electronic implants must stay at least 10 cm away from the control panel.

⚠ WARNING – Risk of suffocation!

Children may put packaging material over their heads or wrap themselves up in it and suffocate.

- Keep packaging material away from children.

- Do not let children play with packaging material.

Children may breathe in or swallow small parts, causing them to suffocate.

- Keep small parts away from children.
- Do not let children play with small parts.

1.5 Halogen bulb

⚠ WARNING – Risk of burns!

The bulbs in the cooking compartment get very hot. There is still a risk of burning for some time after they have been switched off.

- Do not touch the glass cover.
- Avoid contact with your skin when cleaning.

⚠ WARNING – Risk of electric shock!

When changing the bulb, the bulb socket contacts are live.

- Before replacing the bulb, ensure that the appliance is switched off in order to prevent a potential electric shock.
- Also unplug the appliance from the mains or switch off the circuit breaker in the fuse box.

1.6 Meat probe

⚠ WARNING – Risk of electric shock!

Using the wrong meat probe could damage the insulation.

- Only use the meat probe for this specific appliance.

1.7 Cleaning function

⚠ WARNING – Risk of fire!

Loose food remnants, fat and meat juices may catch fire when the cleaning function is in progress.

- Before you start the cleaning function, always remove coarse dirt from the cooking compartment.
- Never clean accessories at the same time.

The outside of the appliance gets very hot when the cleaning function is in progress.

- Never hang combustible objects, e.g. tea towels, on the door handle.
- Leave the front of the appliance clear.
- Keep children at a safe distance.

If the door seal is damaged, a large amount of heat is generated around the door.

- Do not scrub or remove the seal.
- Never operate the appliance if the seal is damaged or missing.

⚠ WARNING – Risk of serious harm to health!

The appliance gets very hot when the cleaning function is in progress. The non-stick coating on baking trays and tins is destroyed and noxious gases are released.

- Never clean non-stick baking trays or baking tins using the cleaning function.
- Never clean accessories at the same time.

⚠ WARNING – Risk of harm to health!

The cleaning function heats up the cooking compartment to a very high temperature so that food left over from roasting, grilling and baking will burn off. This process releases vapours, which can irritate mucous membranes.

- Keep the kitchen well ventilated while the cleaning function is running.
- Do not remain in the room for long periods.
- Keep children and pets away.

⚠ WARNING – Risk of burns!

The cooking compartment gets very hot when the cleaning function is in progress.

- Never open the appliance door.
- Allow the appliance to cool down.
- Keep children at a safe distance.

⚠ The outside of the appliance gets very hot when the cleaning function is in progress.

- Never touch the appliance door.
- Allow the appliance to cool down.
- Keep children at a safe distance.

2 Preventing material damage

2.1 General

ATTENTION!

Objects on the cooking compartment floor at over 50 °C will cause heat to build up. The baking and roasting times will no longer be correct and the enamel will be damaged.

- Do not place any accessories, greaseproof paper or foil of any kind on the cooking compartment floor.
- Only place cookware on the cooking compartment floor if a temperature above 50 °C has been set.

When the cooking compartment is hot, any water inside it will create steam. The change in temperature may cause damage.

- Never pour water into the cooking compartment when it is still hot.
- Never place cookware containing water on the cooking compartment floor.

The prolonged presence of moisture in the cooking compartment leads to corrosion.

- Allow the cooking compartment to dry after use.
- Do not keep moist food in the cooking compartment for a long time with the door closed.
- Do not store food in the cooking compartment.

Leaving the appliance to cool down with the door open will damage the front of neighbouring kitchen units over time.

- Always allow the cooking compartment to cool down with the door closed after cooking at high temperatures.
- Take care not to trap anything in the appliance door.
- Only leave the cooking compartment to dry with the door open if a lot of moisture was produced during operation.

Fruit juice dripping from the baking tray leaves stains that cannot be removed.

- When baking very juicy fruit flans, do not pack too much on the baking tray.
- If possible, use the deeper universal pan.

Using oven cleaner in a hot cooking compartment damages the enamel.

- Never use oven cleaner in the cooking compartment when it is still warm.
- Remove all food remnants from the cooking compartment and the appliance door before you next heat up the appliance.

If the seal is very dirty, the appliance door will no longer close properly during operation. This may damage the front of adjacent kitchen units.

- Keep the seal clean at all times.
- Never operate the appliance if the seal is damaged or missing.

Sitting or placing objects on the appliance door may damage it.

- Do not place or hang objects on the appliance door.
- Do not place cookware or accessories on the appliance door.

With certain models, accessories may scratch the door pane when closing the appliance door.

- Always push accessories fully into the cooking compartment.

3 Environmental protection and saving energy

Help protect the environment by using your appliance in a way that conserves resources and by disposing of reusable materials properly.

3.1 Disposing of packaging

The packaging materials are environmentally compatible and can be recycled.

- Sort the individual components by type and dispose of them separately.

  Information about current disposal methods are available from your specialist dealer or local authority.

3.2 Saving energy

If you follow these instructions, your appliance will use less power.

Only preheat the appliance if the recipe or the recommended settings tell you to do so.

- Not preheating the appliance can reduce the energy used by up to 20%.

Use dark-coloured, black-coated or enamelled baking tins.

- These types of baking tin absorb the heat particularly well.

Open the appliance door as little as possible during operation.

- This will maintain the temperature in the cooking compartment and eliminate the need for the appliance to reheat.

When baking multiple dishes, do so in succession or in parallel.

- The cooking compartment is heated after baking the first dish. This reduces the baking time for the second cake.

If the cooking time is relatively long, you can switch the appliance off 10 minutes before the cooking time ends.

- There will be enough residual heat to finish cooking the dish.

Remove any accessories that are not being used from the cooking compartment.

- Accessories that are not being used do not need to be heated.

Allow frozen food to defrost before cooking.

- This will save the energy that would otherwise be required to defrost it.

4 Familiarising yourself with your appliance

4.1 Controls

You can use the control panel to configure all functions of your appliance and to obtain information about the operating status.

Note: On certain models, specific details such as colour and shape may differ from those pictured.

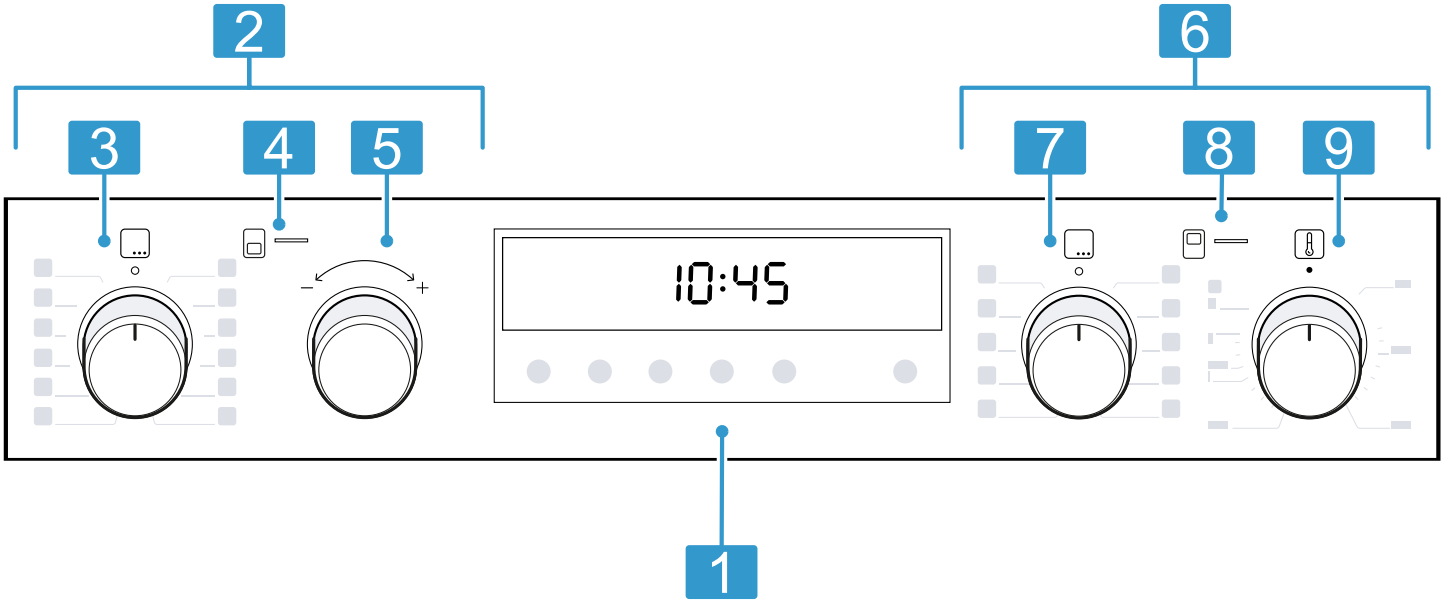

1	**Buttons and display** The buttons are touch-sensitive surfaces. To select a function, simply press lightly on the relevant field. The display shows symbols for active functions and the time-setting options. → *"Buttons and display", Page 7*
2	**Main oven** Controls for the main oven
3	**Function selector** Use the function selector to set the types of heating and other functions. You can turn the function selector clockwise or anti-clockwise from the zero setting ○. Depending on the appliance, the function selector can be pushed in. Press on the function selector to click it into or out of the zero setting ○. → *"Types of heating and functions", Page 7*
4	**Heating-up control** → *"Heating-up control", Page 9*
5	**Temperature selector** Use the temperature selector to set the temperature for the type of heating and select settings for other functions. You can turn the temperature selector clockwise and anti-clockwise; it does not have a zero setting. Depending on the appliance, the temperature selector can be pushed in. Press on the temperature selector to click it in or out. → *"Temperature and setting levels", Page 9*
6	**Top oven** Controls for the top oven
7	**Function selector** Use the function selector to set the types of heating and other functions. You can turn the function selector clockwise or anti-clockwise from the zero setting ○. Depending on the appliance, the function selector can be pushed in. Press on the function selector to click it into or out of the zero setting ○. → *"Types of heating and functions", Page 7*
8	**Heating-up control** → *"Heating-up control", Page 9*

9	**Temperature selector** Use the temperature selector to set the temperature for the type of heating and select settings for other functions. You can turn the temperature selector clockwise and anti-clockwise. Depending on the appliance, the temperature selector can be pushed in. Press on the temperature selector to click it in or out. → *"Temperature and setting levels", Page 9*

4.2 Buttons and display

You can use the buttons to set various functions for your appliance. The display shows the settings.

If a function is active, the corresponding symbol lights up in the display. The clock symbol ⏲ only lights up when you change the time.

Symbol	Function	Use
⏲	Time-setting options	Select the time ⏲, timer ⌛, cooking time ⏲ and the end time ⏲. To select the individual time-setting options, press the ⏲ button several times. The red bar above or below the respective symbol indicates the function to which the setting in the display corresponds.
− +	Minus Plus	Decrease the setting values. Increase the setting values.
	Oven light	Switch the lighting in the cooking compartment on and off.
	Rapid heating	Preheat the cooking compartment rapidly without accessories.
	Childproof lock	Activate or deactivate the childproof lock.

4.3 Types of heating and functions

To ensure that you always use the right type of heating to cook your food, we have explained the differences and applications below.
When you select a type of heating, the appliance suggests a suitable temperature or setting. You can use these values or change them within the specified range.

Main oven

Symbol	Type of heating and temperature range	What it's used for/how it works
	3D hot air 30 - 275 °C	Bake and roast on one or more levels. The fan distributes the heat from the ring-shaped heating element in the back wall evenly around the cooking compartment.
	Gentle hot air 125 - 275 °C	Cook selected dishes gently on one level without preheating. The fan distributes the heat from the ring-shaped heating element in the back wall evenly around the cooking compartment. The food is cooked in phases using residual heat. Always keep the appliance door closed when cooking. This type of heating is used to determine the energy consumption in air recirculation mode and the energy efficiency class.
	Pizza setting 30 - 275 °C	Cook pizza or dishes that require a lot of heat from below. The bottom heating element and the ring-shaped heating element in the back wall heat the cooking compartment.
	Keeping food warm 60 - 100 °C	Keep cooked food warm.
	Defrosting 30 - 60 °C	Gently defrost frozen food.

Symbol	Type of heating and temperature range	What it's used for/how it works
	Slow cooking 70 - 120 °C	Slowly and gently cook seared, tender pieces of meat in uncovered cookware. The heat is emitted evenly from above and below at a low temperature.
	Full-surface grill Grill settings: 1 = low 2 = medium 3 = high	Grill flat items such as steak and sausages, or make toast. Gratinate food. The entire area underneath the grill element becomes hot.
	Hot air grilling 30 - 275 °C	Roast poultry, whole fish and larger pieces of meat. The grill element and the fan switch on and off alternately. The fan circulates the hot air around the food.
	Top/bottom heating 30 - 275 °C	Traditionally bake or roast on one level. This type of heating is ideal for cakes with moist toppings. The heat is emitted evenly from above and below. This type of heating is used to measure the energy consumption in the conventional mode.

Top oven

Symbol	Type of heating and temperature range	What it's used for/how it works
	Top/bottom heating	Bake on one level. The heat is emitted evenly from above and below. This type of heating is used to measure the energy consumption in the conventional mode.
	Bottom heating	Final baking or cooking food in a bain marie. Heat is emitted from below.
	Grill, small area Grill settings: 1 = low 2 = medium 3 = high	Grill small quantities of steak, sausages or toast. Brown small quantities of food. The central area underneath the grill element becomes hot.
	Full-surface grill Grill settings: 1 = low 2 = medium 3 = high	Grill flat items such as steak, sausages, or toast. Brown food. The entire area underneath the grill element becomes hot.

Other functions

Here, you can find an overview of other functions of your appliance.

Main oven

Symbol	Function	Use
	Programme	Use programmed setting values for various types of food. → *"Programme", Page 15*
	Pyrolytic self-cleaning	Set the cleaning function, which cleans the cooking compartment virtually independently. → *"Pyrolytic self-cleaning ", Page 23*
	Remote start	Start and operate the appliance via the Home Connect app. → *Page 20*

Top oven

Symbol	Function	Use
	Oven light	Illuminate the cooking compartment without heating.
	Pyrolytic self-cleaning	Set the cleaning function, which cleans the cooking compartment virtually independently. → *"Pyrolytic self-cleaning ", Page 23*
	Remote start	Start and operate the appliance via the Home Connect app. → *Page 20*

Note: If you operate your appliance with the Home Connect app, even more functions are available for you. You can find more information about this in the app.

4.4 Temperature and setting levels

There are different settings for the types of heating and functions.

Main oven

The settings appear in the display.

Top oven

Symbol	Function	Use
●	Zero setting	The appliance is not heating up.
50–275	Temperature range	Set the temperature in the cooking compartment in °C.
1, 2, 3 or I, II, III	Grill settings	Set the grill settings for **Full-surface grill** and **Grill, small area** (depending on the appliance model). 1 = low 2 = medium 3 = high
1, 2, 3 or I, II, III	Cleaning settings	Set the cleaning settings for **Pyrolytic self-cleaning**. 1 = light 2 = medium 3 = intensive

→ *"Heating-up control", Page 9*

Heating-up control

The heating-up indicator for the oven remains lit while the appliance is heating.

Note: Due to thermal inertia, the temperature displayed may differ slightly from the actual temperature inside the cooking compartment.

Heating-up indicator

The line at the bottom of the display also turns red from left to right as the main cooking compartment heats up.

Residual heat indicator

If you switch off the appliance, the line on the display shows the residual heat in the main cooking compartment. The lower the temperature in the cooking compartment, the less the line is filled.

Notes

- The heat-up indicator will only show the temperature increasing for types of heating for which a temperature is set. For grill settings, for example, the heat-up indicator shows a full line from the beginning.
- If the temperature in the cooking compartment is too high when the appliance is started, h appears in the display for some types of heating. Switch off the appliance and allow it to cool down. Then restart operation of the appliance.

The temperature can be set in 1 degree increments up to 100 °C, and in 5 degree increments thereafter.

Note: For grill setting 3, the appliance lowers the setting to grill setting 1 after approx. 20 minutes.

→ *"Heating-up control", Page 9*

4.5 Cooking compartment

The functions in the cooking compartment make your appliance easier to use.

Rails

The rails in the cooking compartment enable you to place accessories at different heights.

→ *"Accessories", Page 10*

The shelf positions are numbered from bottom to top. You can remove the rails, e. g. for cleaning.

→ *"Shelf supports", Page 25*

Main cooking compartment

The cooking compartment has five shelf positions.

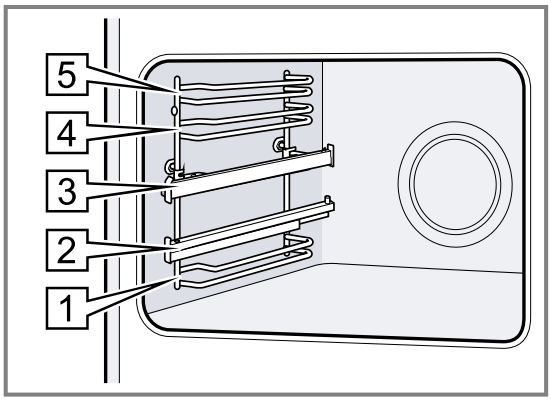

Top cooking compartment
The cooking compartment has three shelf positions.

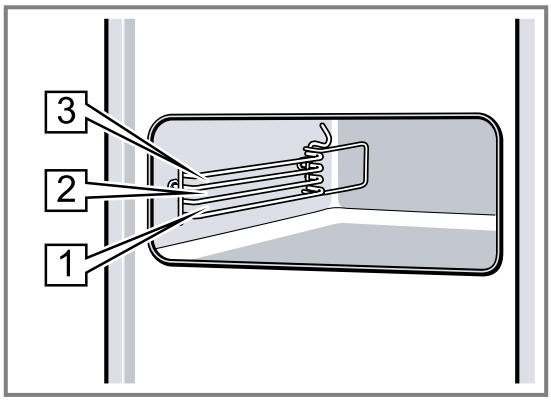

Lighting

The oven light lights up the cooking compartment. With most types of heating and functions, the lighting lights up during operation. The lighting goes off when operation ends.

You can switch on the lighting without heating the oven using the **Oven light** button.

Cooling fan

The cooling fan switches on and off depending on the appliance's temperature. The hot air escapes above the door.

ATTENTION!
Do not cover the ventilation slot above the appliance door. The appliance overheats.
▸ Ensure that the ventilation slots are unobstructed.

To ensure that the appliance cools down more quickly after operation, the cooling fan continues to run for a certain period afterwards.

Appliance door

If you open the appliance door during operation, the appliance stops heating. When you close the appliance door, the appliance continues to heat again.

5 Accessories

Use original accessories. These have been made especially for your appliance.

Note: Accessories may become deformed if they get hot. Deformation has no effect on function. As the accessory cools down, it will regain its original shape.

The accessories supplied may differ depending on the appliance model.

Accessories		Use
Wire rack	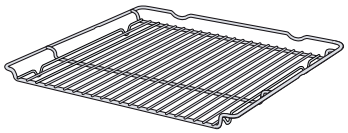	■ Cake tins ■ Ovenproof dishes ■ Cookware ■ Meat, e.g. roasting joints or steak ■ Frozen meals
Universal pan	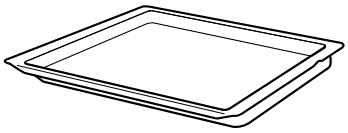	■ Moist cakes ■ Baked items ■ Bread ■ Large roasts ■ Frozen meals ■ Catching dripping liquids, e.g. fat when grilling food on the wire rack.
Meat thermometer	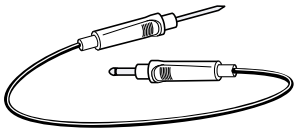	High-precision roasting or cooking. *→ "Meat thermometer", Page 14*

5.1 Locking function

The locking function prevents the accessories from tilting when they are pulled out.
You can pull out the accessories approximately halfway without them tipping. The accessories must be inserted into the cooking compartment correctly for the tilt protection to work properly.

5.2 Sliding accessories into the cooking compartment

Always slide accessories into the cooking compartment correctly. This is the only way to ensure that accessories can be pulled out approximately halfway without tipping.

1. Turn the accessories so that the notch a is at the rear and is facing downwards.
2. Insert accessories between the two guide rods for the shelf position.

Wire rack	Insert the wire rack with the open side facing the appliance door and the curved lip ⌣ facing downwards. 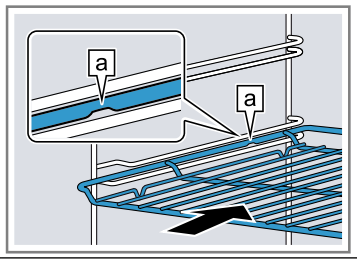
Baking tray E.g. universal pan or baking tray	Slide the tray, e.g. the universal pan, in with the sloping edge [b] facing the appliance door. 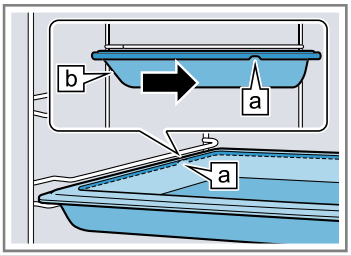

3. Place the accessory at the shelf positions with the pull-out rails and pull out the pull-out rails.

Wire rack or baking tray	Position the accessory so that its edge is behind the lug [a] on the pull-out rail. 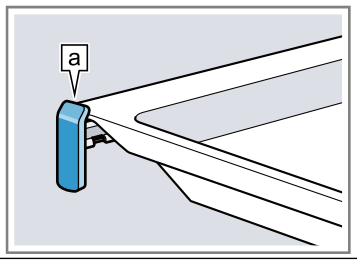

Note: The pull-out rails lock in place when they are fully pulled out. Gently push the pull-out rails back into the cooking compartment.

4. Push the accessory all the way in, making sure that it does not touch the appliance door.

Note: Take any accessories that you will not be using out of the cooking compartment while the appliance is in operation.

Combining accessories

You can combine the wire rack with the universal pan to catch any liquid that drips down.

1. Place the wire rack on the universal pan so that both spacers [a] are on the rear edge of the universal pan.
2. Insert the universal pan between the two guide rods for a shelf position. In so doing, the wire rack is on top of the upper guide rod.

Wire rack on universal pan	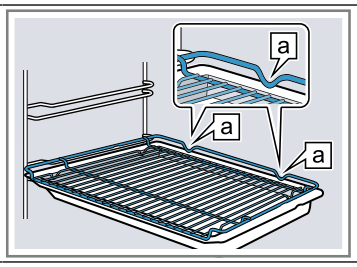

5.3 Other accessories

You can purchase other accessories from our after-sales service, specialist retailers or online.
You will find a comprehensive range of products for your appliance in our brochures and online:
www.bosch-home.com
Accessories vary from one appliance to another. When purchasing accessories, always quote the exact product number (E no.) of your appliance.
You can find out which accessories are available for your appliance in our online shop or from our after-sales service.

6 Before using for the first time

Configure the settings for initial start-up. Clean the appliance and accessories.

6.1 Initial use

You need to make settings for initial use before you can use your appliance.

Setting the time on the clock

Once the appliance has been connected to the mains or following a power failure, the time flashes on the display. The time starts at "12:00". Set the current time.

Requirement: The function selector must be set to the "Off" position ○.

1. Use the — or + button to set the time.
2. Press the ◷ button.

✔ The time that is set appears on the display.

Tip: You can go to the basic settings → *Page 19* to specify whether or not the time should be shown on the display.

6.2 Cleaning the appliance before using it for the first time

Clean the cooking compartment and accessories before using the appliance to prepare food for the first time.

1. Remove any accessories and leftover packaging, such as polystyrene pellets, from the cooking compartment.
2. Before heating the appliance, wipe the smooth surfaces in the cooking compartment with a soft, damp cloth.
3. Keep the room ventilated while the appliance is heating.
4. Set the type of heating and temperature.
→ *"Basic operation", Page 12*

	Main oven	**Top oven**
Type of heating	3D hot air	Top/bottom heating

	Main oven	Top oven
Temperature	Maximum	240 °C
Cooking time	1 hour	1 hour

5. Switch off the appliance after the specified cooking time.
6. Wait until the cooking compartment has cooled down.
7. Clean the smooth surfaces with soapy water and a dish cloth.
8. Clean the accessories using soapy water and a dish cloth or soft brush.

7 Basic operation

7.1 Switching on the appliance

- Turn the function selector to any position other than the "Off" position ○.
- ✔ The appliance is switched on.

7.2 Switching off the appliance

- Turn the function selector to the "Off" position ○.
- ✔ The appliance is switched off.

7.3 Setting the type of heating and temperature

1. Use the function selector to set the type of heating.
2. Use the temperature selector to set the temperature or grill setting.
- ✔ The appliance starts heating after a few seconds.
3. When your food is ready, switch off the appliance.

Tips

- The most suitable type of heating for your food can be found in the description of the type of heating.
- You can also set a cooking time and end time on the appliance.
  → *"Time-setting options", Page 12*

Changing the type of heating

You can change the type of heating at any time.

- Use the function selector to set the required type of heating.

Changing the temperature

You can change the temperature at any time.

- Use the temperature selector to set the required temperature.

8 Time-setting options

Your appliance has different time-setting options, with which you can control its operation.

8.1 Overview of the time-setting options

With the ⏲ button, select the different time-setting options.

Time-setting option	Use
Timer ⌛	The timer can be set independently of the appliance when it is in operation. It does not affect the appliance.
Cooking time ⏲	Main oven: If you set a cooking time, operation of the appliance stops automatically once this time has elapsed.
End time ⏲	Main oven: For the cooking time, you can set the time at which operation ends. The appliance starts up automatically so that it finishes cooking at the required time.
Time ⏲	You can set the time.

8.2 Setting the timer

The timer runs independently of the appliance when it is in operation. The timer can be set when the appliance is switched on or off, up to 23 hours and 59 minutes. The timer has its own audible signal so that you can tell whether it is the timer or a cooking time which has elapsed.

1. Press the ⏲ button repeatedly until ⌛ is highlighted in the display.
2. Use the — or + button to set the timer duration.

Button	Default value
—	5 minutes
+	10 minutes

   The timer duration can be set in 30-second increments up to 10 minutes. Above 10 minutes, the time increments become longer the higher the value.
   - ✔ The timer starts and the timer duration begins to count down after a few seconds.
   - ✔ An audible signal sounds and the timer duration is zero in the display when the timer duration has elapsed.
3. Once the timer duration has elapsed:
   – Press any button to switch off the timer.

Changing the timer

You can change the timer duration at any time.

Requirement: ⌛ is highlighted on the display.

- Use the — or + button to change the timer duration.
- ✔ The appliance applies the change after a few seconds.

Cancelling the timer

You can cancel the timer duration at any time.

Requirement: ⌛ is highlighted on the display.

- ▶ Use the — button to reset the timer duration to zero.
- ✔ After a few seconds, the appliance applies the change and ⌛ goes out.

8.3 Setting the cooking time

You can set a cooking time for operation of up to 23 hours 59 minutes.

Requirements

- A type of heating and a temperature or setting are set for the main oven ⊡.
- Operation with the meat probe has not been set.
- Operation with Sabbath mode has not been set.

1. Press the ◷ button repeatedly until the symbol for the oven being switched on and the ◷ symbol are highlighted.
2. Use the — or + button to set the cooking time.

Button	Default value
—	10 minutes
+	30 minutes

The cooking time can be set in 1-minute increments up to 1 hour, and then in 5-minute increments.

- ✔ The appliance starts heating and the cooking time counts down after a few seconds.
- ✔ If the cooking time has elapsed, an audible signal sounds and the display shows the cooking time as zero.

3. When the cooking time has elapsed:
   - Press any button to end the audible signal before it sounds.
   - To set a cooking time again, press the + button.
   - When your food is ready, switch off the appliance.

Changing the cooking time

You can change the cooking time at any time.

Requirement: ◷ is highlighted on the display.

- ▶ Change the cooking time using the — or + button.
- ✔ The appliance applies the change after a few seconds.

Cancelling the cooking time

You can cancel the cooking time at any time.

Requirement: ◷ is highlighted on the display.

- ▶ Reset the cooking time to zero using the — button.
- ✔ After a few seconds, the appliance applies the change and continues to heat without a cooking time.

8.4 Setting the end time

You can delay the time at which cooking is due to finish by up to 23 hours and 59 minutes.

Notes

- In order to achieve a good cooking result, do not delay the end time once the appliance is already in operation.
- Food will spoil if you leave it in the oven cavity too long.

Requirements

- A type of heating and a temperature or setting are set for the main oven ⊡.
- A cooking time is set.
- Operation with the meat probe has not been set.
- Operation with Sabbath mode has not been set.

1. Press the ◷ button repeatedly until the symbol for the oven being switched on and the ◷ symbol are highlighted.
2. Press the — or + button.

- ✔ The display shows the calculated end time.

3. Use the — or + button to delay the end time.

- ✔ After a few seconds, the appliance applies the setting and the display shows the set end time.
- ✔ Once the calculated start time has been reached, the appliance starts heating up and the cooking time starts counting down.
- ✔ Once the time has elapsed, an audible signal sounds and the display shows the cooking time as zero.

4. When the cooking time has elapsed:
   - Press any button to end the signal prematurely.
   - To set another cooking time, press the + button.
   - When your food is ready, switch off the appliance.

Changing the end time

In order to achieve a good cooking result, you can only change the set end time before operation starts and the cooking time starts counting down.

Requirement: ◷ is highlighted on the display.

- ▶ Use the — or + button to delay the end time.
- ✔ The appliance applies the change after a few seconds.

Cancelling the end time

You can delete the set end at any time.

Requirement: ◷ is highlighted on the display.

- ▶ Reset the end time to the current time plus the set cooking time using the — button.
- ✔ After a few seconds, the appliance applies the change and starts heating up. The cooking time counts down.

8.5 Setting the time on the clock

Once the appliance has been connected to the mains or following a power failure, the time flashes on the display. The time starts at "12:00". Set the current time.

Requirement: The function selector must be set to the "Off" position ○.

1. Use the — or + button to set the time.
2. Press the ◷ button.

- ✔ The time that is set appears on the display.

Tip: You can go to the basic settings → *Page 19* to specify whether or not the time should be shown on the display.

Changing the time on the clock

You can change the time on the clock at any time.

Requirement: The function selector must be set to the "Off" position ○.

1. Press the ◷ button repeatedly until ◷ is highlighted in the display.

2. Use the — or + button to change the time.
✔ The appliance applies the change after a few seconds.

9 Meat thermometer

Cook with precision by inserting the meat probe into the food and setting a core temperature on the appliance. Once the set core temperature has been reached in the food, the appliance stops automatically. The meat probe can be used in the main oven.
The time-setting options for cooking time and end time, as well as the cleaning function, cannot be used with the meat probe and the Sabbath setting at the same time. Example: The cooking time in the top oven cannot be operated at the same time as the meat probe in the main oven.

9.1 Suitable types of heating with the meat thermometer

Only certain types of heating are suitable for use with the meat thermometer.
Suitable heating functions include:
- **3D hot air**
- **Gentle hot air**
- **Pizza setting**
- **Hot air grilling**
- **Top/bottom heating**

Note: If the meat thermometer is being used and you select an unsuitable type of heating, a signal sounds.

9.2 Inserting the meat thermometer

Use the meat thermometer supplied or order a suitable meat thermometer from our after-sales service.

⚠ **WARNING – Risk of electric shock!**
Using the wrong meat probe could damage the insulation.
- ▸ Only use the meat probe for this specific appliance.

ATTENTION!
Otherwise the meat probe may be damaged.
- ▸ Do not trap the cable of the meat probe.
- ▸ To prevent the meat probe from being damaged by excessive heat, there must be a gap of a few centimetres between the grill element and the meat probe. The meat may expand during the cooking process.

1. Insert the meat thermometer at an angle into the thickest part of the meat.

   Ensure that the tip of the meat thermometer is correctly positioned in the meat:
   - The tip must be roughly in the middle of the food.
   - The tip must not be inserted in the fat.
   - The tip must not touch any cookware or bones.
2. Place the food with the meat thermometer into the cooking compartment.

   It is best to place the food in cookware into the centre of the wire rack.
3. Plug the meat thermometer into the socket on the left-hand side of the cooking compartment.

Notes
- If you remove the meat thermometer while the food is cooking, all the settings will be reset.
- Do not remove the meat thermometer when turning the food. Once you have turned the food, check that the meat thermometer is correctly positioned in the food.

9.3 Setting the meat thermometer

The meat probe measures the temperature inside the food between 30 °C and 99 °C.

Requirements
- The food with the meat probe is in the cooking compartment.
- The meat probe is plugged in inside the cooking compartment.
- The time-setting options for cooking time and end time have not been set.
- A cleaning function has not been set.
- Operation with Sabbath mode has not been set.

1. Use the function selector to set a suitable type of heating.

✔ lights up in the display and the core temperature display appears next to the temperature of the cooking compartment.
2. Use the — or + button to set the core temperature.
3. Use the temperature selector to set the temperature of the cooking compartment.

   Set the cooking compartment temperature at least 10 °C higher than the core temperature.
   Do not set the cooking compartment temperature to higher than 250 °C.

✔ The appliance starts heating after a few seconds.
✔ The current core temperature of the food is shown on the left, while the set core temperature is shown on the right, e.g. 15 °C|75 °C. The current core temperature only appears once it reaches 10 °C.
✔ Once the food reaches the core temperature, an audible signal sounds and, in the display, the current core temperature is equal to the set core temperature, e.g. 75 °C|75 °C.

4. ⚠ **WARNING – Risk of burns!**
   The cooking compartment, accessories and meat probe become very hot.
   - ▸ Always use oven gloves to remove hot accessories and the meat probe from the cooking compartment.

   When the core temperature is reached:
   - Switch off the appliance.
   - Pull the meat probe out of the socket in the cooking compartment.
   - Pull the meat probe out of the food remove it from the cooking compartment.

10 Programme

The programmes help you to use your appliance to prepare different dishes by selecting the optimum settings automatically.

10.1 Cookware for programmes

You should therefore use heat-resistant cookware that is suitable for temperatures up to 300 °C.
Glass or glass ceramic cookware is best. The joint should cover approx. two thirds of the cookware base.

Cookware made from the following material is not suitable:

- Bright, shiny aluminium
- Unglazed clay
- Plastic or plastic handles

10.2 Programme table

The programme numbers are assigned to specific foods.

No.	Food	Cookware	Weight range Weight setting	Add liquid	Shelf position	Information
01	**Pizza, thin base** Frozen, prebaked	Universal pan with greaseproof paper	0.28–0.4 kg Total weight	No	3	For a second pizza, follow the instructions on the packaging
02	**Pizza, deep-pan** Frozen, prebaked	Universal pan with greaseproof paper	0.28–0.6 kg Total weight	No	3	For a second pizza, follow the instructions on the packaging
03	**Lasagne** Frozen	Original packaging	0.3–1.2 kg Total weight	No	3	-
04	**Chips** Frozen	Universal pan with greaseproof paper	0.2–0.75 kg Total weight	No	3	Spread out on the universal pan
05	**Prebaked bread rolls** Frozen, prebaked	Universal pan with greaseproof paper	0.1–0.8 kg Total weight	No	3	-
06	**Potato gratin**	Ovenproof dish without lid	0.5–3.0 kg Total weight	No	2	-
07	**Pasta bake** With precooked pasta	Ovenproof dish without lid	0.4–3.0 kg Total weight	No	2	-
08	**Baked potatoes, whole** Unpeeled, starchy potatoes	Universal pan	0.3–1.5 kg Total weight	No	3	-
09	**Vegetable stew** Vegetarian	Deep roasting dish with lid	0.5–2.5 kg Total weight	As per recipe	2	Cut vegetables that take longer to cook (e.g. carrots) into smaller pieces than vegetables that take less time to cook (e.g. tomatoes)
10	**Meat stew**	Deep roasting dish with lid	0.5–3.0 kg Total weight	As per recipe	2	Do not sear the meat beforehand
11	**Goulash** Diced beef or pork, with vegetables	Deep roasting dish with lid	0.5–2.5 kg Total weight	As per recipe	2	Place the meat at the bottom and cover with vegetables Do not sear the meat beforehand
12	**Fish, whole** Ready to cook, seasoned	Roasting dish with lid	0.3–1.5 kg Weight of fish	Cover the bottom of the roasting dish	2	-
13	**Chicken, unstuffed** Ready to cook, seasoned	Roasting dish with glass lid	0.6–2.5 kg Chicken weight	No	2	Place in the cookware with the breast facing up

No.	Food	Cookware	Weight range Weight setting	Add liquid	Shelf position	Information
14	**Chicken pieces** Ready to cook, seasoned	Roasting dish with lid	0.1–0.8 kg Weight of the heaviest piece	Cover the bottom of the roasting dish	2	-
15	**Turkey breast** Whole, seasoned	Roasting dish with glass lid	0.5–2.5 kg Turkey breast weight	Cover the bottom of the roasting dish, and add up to 250 g vegetables if you wish	2	-
16	**Duck, unstuffed** Ready to cook, seasoned	Roasting dish without lid	1.0–2.7 kg Duck weight	No	2	-
17	**Goose, unstuffed** Ready to cook, seasoned	Roasting dish without lid	2.5–3.5 kg Goose weight	No	2	-
18	**Pot-roasted beef** E.g. prime rib, shoulder, rump or marinated beef roast	Roasting dish with lid	0.5–2.5 kg Weight of meat	Almost cover the meat with liquid	2	Do not sear the meat beforehand
19	**Sirloin, medium** Ready to cook, seasoned	Roasting dish without lid	0.5–2.5 kg Weight of meat	No	2	Place in the cookware with the fatty side up Do not sear the meat beforehand
20	**Beef olives** Stuffed with vegetables or meat	Roasting dish with lid	0.5–2.5 kg Total weight of all the stuffed beef olives	Add stock, water or another liquid to the dish until the beef olives are almost covered	2	Do not sear the meat beforehand
21	**Meat loaf, fresh** Minced beef, pork or lamb	Roasting dish with lid	0.5–2.5 kg Roast weight	No	2	Do not sear the meat beforehand
22	**Leg of lamb, medium** Boned, seasoned	Roasting dish with lid	0.5–2.5 kg Weight of meat	Cover the bottom of the roasting dish, and add up to 250 g vegetables if you wish	2	Do not sear the meat beforehand
23	**Leg of lamb, well done** Boned, seasoned	Roasting dish with lid	0.5–2.5 kg Weight of meat	Cover the bottom of the roasting dish, and add up to 250 g vegetables if you wish	2	Do not sear the meat beforehand
24	**Joint of veal, marbled** E.g. saddle or topside	Roasting dish with lid	0.5–3.0 kg Weight of meat	Cover the bottom of the roasting dish, and add up to 250 g vegetables if you wish	2	Do not sear the meat beforehand

No.	Food	Cookware	Weight range Weight setting	Add liquid	Shelf position	Information
25	**Joint of veal, lean** E.g. tenderloin or eye	Roasting dish with lid	0.5–2.5 kg Weight of meat	Cover the bottom of the roasting dish, and add up to 250 g vegetables if you wish	2	Do not sear the meat beforehand
26	**Leg of roe venison** Boned, seasoned with salt	Roasting dish with lid	0.5–2.0 kg Weight of meat	Cover the bottom of the roasting dish, and add up to 250 g vegetables if you wish	2	-
27	**Rabbit, whole** Ready to cook, seasoned	Roasting dish with glass lid	1.0–2.5 kg Weight of meat	Cover the bottom of the roasting dish, and add up to 250 g vegetables if you wish	2	-
28	**Pork neck joint** Boned, seasoned	Roasting dish with glass lid	0.5–3.0 kg Weight of meat	Cover the bottom of the roasting dish, and add up to 250 g vegetables if you wish	2	Do not sear the meat beforehand
29	**Joint of pork, with crackling** E.g. shoulder, seasoned, and scored rind	Roasting dish with glass lid	0.5–3.0 kg Weight of meat	Cover the bottom of the roasting dish, and add up to 250 g vegetables if you wish	2	Place in the cookware fatty side up; salt the rind well
30	**Pork tenderloin steak** Seasoned	Roasting dish with glass lid	0.5–2.5 kg Weight of meat	Cover the bottom of the roasting dish, and add up to 250 g vegetables if you wish	2	Do not sear the meat beforehand

10.3 Preparing food for the programme

Use fresh and, ideally, chilled food. Use frozen food straight from the freezer.

1. Weigh the food.

   The weight of the food is required in order to correctly set the programme.
2. Add the food to the cookware.
3. Place the cookware onto the wire rack.

   Always place the cookware into the cooking compartment while it is cold.

10.4 Setting a programme

The appliance selects the optimal type of heating, temperature and cooking time. All you need to do is set the weight.

Notes

- You can set the weight only in the intended area.
- After the programme starts, you can no longer change the programme and the weight.

1. Use the function selector to set **Programme** ⊞.
2. Use the — or + button to set the required programme.
3. Use the temperature selector to set the weight of your food. Always set the next higher weight.
   - To call up the programme's cooking time, press the ◷ button. The cooking time cannot be changed.

- For some programmes, the ⏲ button can be used to delay the end.
  → *"Setting the end time", Page 13*
- ✔ After a few seconds, the programme starts and the cooking time counts down.
- ✔ If the programme has ended, an audible signal sounds and the display shows the cooking time as zero.

4. When the programme ends:
   - Press any button to end the audible signal prematurely.
   - To set a cooking time for further cooking, press the + button. The appliance continues to heat using the programme settings.
   - When your food is ready, switch off the appliance.

11 Childproof lock

You can secure your appliance to prevent children from accidentally switching it on or changing the settings.

Note: You can go to the basic settings → *Page 19* to specify whether you want the option to set the childproof lock.

11.1 Activating and deactivating the childproof lock

Requirement: The function selector must be set to the "Off" position ○.

- ▶ To activate the childproof lock, press and hold the 🔑 button until 🔑 appears in the display.
  - To deactivate the childproof lock, press and hold the 🔑 button until 🔑 goes out in the display.

12 Rapid heating

To save time, you can shorten the preheating time for the main oven for set temperatures over 100 °C.
You can use rapid heating for the following types of heating:

- **3D hot air**
- **Top/bottom heating**

12.1 Setting rapid heating for the main oven

To ensure an even cooking result, do not place the food in the cooking compartment until rapid heating has come to an end.

Note: Do not set a cooking time until rapid heating has come to an end.

1. Set a suitable type of heating and a temperature of at least 100 °C.
2. Press the ♨ button.
   - ✔ ♨ appears in the display.
   - ✔ Rapid heating starts after a few seconds.
   - ✔ Once rapid heating has ended, an audible signal sounds and the ♨ symbol goes out in the display.
3. Place the food in the cooking compartment.

13 Sabbath mode

You can use the Sabbath mode to set a cooking time of over 70 hours for the main oven. You can use **Top/bottom heating** to keep food warm between 85 °C and 140 °C during this time without having to switch the appliance on or off.

13.1 Starting Sabbath mode

Notes

- If you open the appliance door during operation, the appliance does not interrupt the operation.
- Once it has started, you can no longer change or interrupt Sabbath mode.
- You cannot delay the end time for Sabbath mode.

Requirements

- Sabbath mode is activated in the basic settings.
  → *"Basic settings", Page 19*
- It is not possible to set operation with a cooking time or end time in the top oven.
- It is not possible to set operation with a cleaning function in the top oven.

1. Use the function selector for the bottom oven to set the programmes.
   - ✔ SAbb appears in the display.
2. Use the temperature selector to set the temperature.
3. Use the − or + button to set the time.
   - ✔ After a few seconds, the appliance starts heating and the time counts down.
   - ✔ Once the time has elapsed, the display shows the time as zero.
4. Switch off the appliance.

14 Basic settings

You can configure the appliance to meet your needs.

14.1 Overview of the basic settings

Here you can find an overview of the basic settings and factory settings. The basic settings depend on the features of your appliance.

Display	Basic setting	Selection
c01	Signal duration upon completion of a time or timer period	1 = 10 seconds 2 = 30 seconds[1] 3 = 2 minutes
c02	Waiting time until a setting is applied	1 = 3 seconds[1] 2 = 6 seconds 3 = 10 seconds
c03	Button tone when pressing a button	0 = off 1 = on[1]
c04	Brightness of the display illumination	1 = dark 2 = medium[1] 3 = bright
c05	Time display	0 = hide the time 1 = display the time[1]
c06	Childproof lock can be adjusted	0 = no 1 = yes[1] 2 = yes, with locked door
c07	Interior lighting during operation	0 = no 1 = yes[1]
c08	Cooling fan run-on time	1 = short 2 = medium[1] 3 = long 4 = extra-long
c09	Telescopic shelves retrofitted[2, 3]	0 = no [1] (for rails and 1-level pull-out) 1 = yes (for 2- and 3-level pull-out)
c10	Sabbath mode available[3]	0 = no[1] 1 = yes
c12	Reset all values to factory settings	0 = no[1] 1 = yes
HC..	Home Connect Settings	→ *"Home Connect ", Page 20*

[1] Factory setting (may vary according to model)
[2] Depending on the appliance specifications
[3] Bottom oven

14.2 Changing basic settings

Requirement: The appliance is switched off.

1. Press and hold the ◷ button for approximately four seconds.
✔ The first basic setting appears in the display, e.g. c012.
2. Use the temperature selector to change the setting.
3. Use the — or + button to switch to the next basic setting.
4. To save the changes, press and hold the ◷ button for approx. four seconds.

Note: Your changes to the basic settings will be retained even after a power failure.

14.3 Discarding changes to the basic settings

▶ Turn the function selector.
✔ All changes are discarded and not saved.

15 Home Connect

This appliance is network-capable. Connecting your appliance to a mobile device lets you control its functions via the Home Connect app, adjust its basic settings and monitor its operating status.
The Home Connect services are not available in every country. The availability of the Home Connect function depends on the availability of Home Connect services in your country. You can find information about this at: www.home-connect.com.
The Home Connect app guides you through the entire login process. Follow the instructions in the Home Connect app to configure the settings.

Tips

- Please consult the documents supplied by Home Connect.
- Please also follow the instructions in the Home Connect app.

Notes

- Please note the safety precautions in this instruction manual and make sure that they are also observed when operating the appliance via the Home Connect app.
  → *"Safety", Page 2*
- Operating the appliance on the appliance itself always takes priority. During this time it is not possible to operate the appliance using the Home Connect app.
- In networked standby mode, the appliance requires a maximum of 2 W.

15.1 Setting up Home Connect

Requirements

- The appliance is connected to the power supply and is switched on.
- You have a smartphone or tablet with a current version of the iOS or Android operating system.
- The smartphone and the appliance are within range of your home network's Wi-Fi signal.

1. Download the Home Connect app.

GET IT ON Google Play

Download on the App Store

2. Open the Home Connect app and scan the following QR code.
3. Follow the instructions in the Home Connect app.

15.2 Home Connect Settings

You can adjust the settings and network settings for Home Connect in the basic settings for your appliance.

Setting	Selection or display	Explanation
HC 01	Connection to the network 0 – Not connected 1 – Connect automatically 2 – Connect manually 3 – Connected	0 and 3 are displays that you cannot set.
HC 02	Connection to the Home Connect app 0 – Ready 1 – Connect 2 – Connected	0 and 2 are displays that you cannot set.
HC 03	Wi-Fi 0 – Off 1 – Activate 2 – On	If Wi-Fi is activated, you can use Home Connect. In networked standby mode, the appliance requires a maximum of 2 W. 2 is a display that you cannot set.
HC 04	Remote start 0 – Deactivated 1 – Manual[1] 2 – Permanent	When remote start is deactivated, you can only view the operating status of the appliance in the app. For manual remote start, you must activate the remote start each time before you can start the appliance via the app. If you open the appliance door within 15 minutes of activating remote start or of the operation ending, remote start is deactivated. For permanent remote start, you can start and operate the appliance remotely at any time.

[1] Factory setting

Setting	Selection or display	Explanation
HC 05	Software update 1 – Update available 2 – Start update	The setting is only displayed if an update is available. 1 is a display that you cannot set.
HC 06	Remote Diagnostics 0 – Not authorised[1] 1 – Authorised	The setting is only displayed if after-sales service is attempting to access the appliance.

[1] Factory setting

15.3 Operating the appliance with the Home Connect app

You can use the Home Connect app to set and start the appliance remotely.

⚠ **WARNING – Risk of fire!**

Combustible objects that are left in the cooking compartment may catch fire.

- Never store combustible objects in the cooking compartment.
- Never open the appliance door if there is smoke inside.
- Switch off the appliance and unplug it from the mains or switch off the circuit breaker in the fuse box.

Requirements

- The appliance is switched on.
- The appliance is connected to your home network and to the Home Connect app.
- In order to be able to set the appliance via the app, the manual or permanent remote start must be selected in the HC 04 basic setting.

1. To activate the remote start, set the function selector on the required oven to ⌂.
2. Implement a setting in the app and send it to the appliance.

15.4 Software update

Your appliance's software can be updated using the software update function, e.g. for the purposes of optimisation, troubleshooting or security updates.
To do this, you must be a registered Home Connect user, have installed the app on your mobile device and be connected to the Home Connect server.
As soon as a software update is available, you will be informed via the Home Connect app and will be able to start the software update via the app. Once the update has been successfully downloaded, you can start installing it via the Home Connect app if you are in your local area network. The Home Connect app will inform you once installation is successful.

Notes

- You can continue to use your appliance as normal while updates are downloading. Depending on your personal settings in the app, software updates can also be set to download automatically.
- We recommend that you install security updates as soon as possible.

15.5 Remote diagnostics

Customer Service can use Remote Diagnostics to access your appliance if you contact them, have your appliance connected to the Home Connect server and if Remote Diagnostics is available in the country in which you are using the appliance.

Tip: For further information and details about the availability of Remote Diagnostics in your country, please visit the service/support section of your local website: www.home-connect.com

15.6 Data protection

Please see the information on data protection.
The first time your appliance is registered on a home network connected to the Internet, your appliance will transmit the following types of data to the Home Connect server (initial registration):

- Unique appliance identification (consisting of appliance codes as well as the MAC address of the Wi-Fi communication module installed).
- Security certificate of the Wi-Fi communication module (to ensure a secure data connection).
- The current software and hardware version of your appliance.
- Status of any previous reset to factory settings.

This initial registration prepares the Home Connect functions for use and is only required when you want to use the Home Connect functions for the first time.

Note: Please note that the Home Connect functions can only be utilised with the Home Connect app. Information on data protection can be retrieved in the Home Connect app.

15.7 Declaration of Conformity

Robert Bosch Hausgeräte GmbH hereby declares that the appliance with Home Connect functionality meets the essential requirements and other relevant provisions of the Directive 2014/53/EU.
A detailed RED Declaration of Conformity can be found online at www.bosch-home.com among the additional documents on the product page for your appliance.

CE

2.4 GHz band: 100 mW max.
5 GHz band: 100 mW max.

BE	BG	CZ	DK	DE	EE	IE	EL
ES	FR	HR	IT	CY	LV	LT	LU
HU	MT	NL	AT	PL	PT	RO	SI
SK	FI	SE	UK	NO	CH	TR	

5 GHz WLAN (Wi-Fi): For indoor use only.

16 Cleaning and servicing

To keep your appliance working efficiently for a long time, it is important to clean and maintain it carefully.

16.1 Cleaning products

In order to avoid damaging the various oven surfaces on the appliance, do not use unsuitable cleaning products.

⚠ **WARNING – Risk of electric shock!**
An ingress of moisture can cause an electric shock.
- Do not use steam- or high-pressure cleaners to clean the appliance.

ATTENTION!
Unsuitable cleaning products may damage the surfaces of the appliance.
- Do not use harsh or abrasive cleaning products.
- Do not use cleaning products with a high alcohol content.
- Do not use hard scouring pads or cleaning sponges.
- Do not use any special cleaners for cleaning the appliance while it is hot.

Using oven cleaner in a hot cooking compartment damages the enamel.
- Never use oven cleaner in the cooking compartment when it is still warm.
- Remove all food remnants from the cooking compartment and the appliance door before you next heat up the appliance.

New sponge cloths contain residues from production.
- Wash new sponge cloths thoroughly before use.

Suitable cleaning agents

Only use cleaning agents that are suitable for the different surfaces on your appliance.

Follow the instructions on cleaning the appliance.
→ *"Cleaning the appliance", Page 23*

Appliance front

Surface	Suitable cleaning agents	Notes
Stainless steel	▪ Hot soapy water ▪ Special stainless steel cleaning products suitable for hot surfaces	To prevent corrosion, remove any limescale, grease, starch or albumin (e.g. egg white) stains on stainless steel fronts immediately. Apply a thin layer of the stainless steel cleaning product with a soft cloth.
Plastic or painted surfaces E.g. control panel	▪ Hot soapy water	Do not use glass cleaner or a glass scraper.

Appliance door

Area	Suitable cleaning agents	Notes
Door panels	▪ Hot soapy water	Do not use a glass scraper or a stainless steel wool. **Tip:** Remove the door panels in order to clean them thoroughly. → *"Appliance door", Page 27*
Door cover	▪ Made of stainless steel: Stainless steel cleaner ▪ Made of plastic: Hot soapy water	Do not use glass cleaner or a glass scraper. **Tip:** Remove the door cover for thorough cleaning. → *"Appliance door", Page 27*
Door handle	▪ Hot soapy water	To avoid permanent stains, remove descaling agents from the door handle immediately.

Cooking compartment

Area	Suitable cleaning agents	Notes
Enamel surfaces	■ Hot soapy water ■ Vinegar water ■ Oven cleaner	Soak any heavily soiled areas and use a brush or steel wool. Leave the appliance door open to dry the cooking compartment after cleaning it. **Tip:** It is best to use the cleaning function. → *"Pyrolytic self-cleaning ", Page 23* **Notes** ■ Enamel burns at very high temperatures, causing minor discolouration. The functionality of your appliance is not affected by this. ■ The edges of thin trays cannot be completely enamelled and may be rough. This does not impair corrosion protection. ■ Food residues will leave a white coating on the enamel surfaces. The coating does not pose a health risk. The functionality of your appliance is not affected by this. You can remove residues with lemon juice.
Glass cover for the oven light	■ Hot soapy water	Use oven cleaner to remove very heavy soiling.
Rails	■ Hot soapy water	Soak any heavily soiled areas and use a brush or steel wool. **Tip:** Remove the shelf supports for cleaning. → *"Shelf supports", Page 25*
Pull-out system	■ Hot soapy water	Use a brush to remove very heavy soiling. Clean the pull-out rails while they are pushed in so that you do not remove the lubricant. Do not clean in the dishwasher. **Tip:** Detach the pull-out system for cleaning. → *"Shelf supports", Page 25*
Accessorles	■ Hot soapy water ■ Oven cleaner	Soak any heavily soiled areas and use a brush or steel wool. Enamelled accessories are dishwasher-safe.
Meat probe	■ Hot soapy water	Use a brush to remove very heavy soiling. Do not clean in the dishwasher.

16.2 Cleaning the appliance

In order to avoid damaging the appliance, you must clean your appliance only as specified, and with suitable cleaning products.

⚠ **WARNING – Risk of burns!**

The appliance and its parts that can be touched become hot during use.

- ▸ Caution should be exercised here in order to avoid touching heating elements.
- ▸ Young children under 8 years of age must be kept away from the appliance.

⚠ **WARNING – Risk of fire!**

Loose food remnants, fat and meat juices may catch fire.

- ▸ Before using the appliance, remove the worst of the food residues and remnants from the cooking compartment, heating elements and accessories.

Requirement: Read the information on cleaning products.
→ *"Cleaning products", Page 22*

1. Clean the appliance using hot soapy water and a dish cloth.
   - For some surfaces, you can use alternative cleaning agents.
     → *"Suitable cleaning agents", Page 22*
2. Dry with a soft cloth.

17 Pyrolytic self-cleaning

The **Pyrolytic self-cleaning** cleaning function cleans the cooking compartment almost by itself.
Use the cleaning function to clean the cooking compartment every two to three months. If required, you can use the cleaning function more frequently. The cleaning function requires approx. 2.5–4.8 kilowatt hours.

17.1 Preparing the appliance for the cleaning function

In order to achieve a good cleaning result, prepare the appliance carefully.

⚠ **WARNING – Risk of fire!**

Combustible objects that are left in the cooking compartment may catch fire.

- Never store combustible objects in the cooking compartment.
- If smoke is emitted, the appliance must be switched off or the plug must be pulled out and the door must be held closed in order to stifle any flames.

Loose food remnants, fat and meat juices may catch fire when the cleaning function is in progress.

- Before you start the cleaning function, always remove coarse dirt from the cooking compartment.
- Never clean accessories at the same time.

The outside of the appliance gets very hot when the cleaning function is in progress.

- Never hang combustible objects, e.g. tea towels, on the door handle.
- Leave the front of the appliance clear.
- Keep children at a safe distance.

If the door seal is damaged, a large amount of heat is generated around the door.

- Do not scrub or remove the seal.
- Never operate the appliance if the seal is damaged or missing.

1. Remove accessories and cookware from the cooking compartment.
2. Unhook the shelf supports and remove them from the cooking compartment.
   → *"Shelf supports", Page 25*
3. Remove heavy soiling from the cooking compartment.
4. Use a detergent solution and a soft cloth to clean the surfaces at the edges of the cooking compartment around the door seal.

   Do not remove or scrub the door seal.
   Use oven cleaner to remove stubborn dirt from the inner door pane.
5. Remove any objects from the cooking compartment. The cooking compartment must be empty.

17.2 Setting the cleaning function for the bottom oven

Ventilate the kitchen while the cleaning function is running.

⚠ **WARNING – Risk of harm to health!**

The cleaning function heats up the cooking compartment to a very high temperature so that food left over from roasting, grilling and baking will burn off. This process releases vapours, which can irritate mucous membranes.

- Keep the kitchen well ventilated while the cleaning function is running.
- Do not remain in the room for long periods.
- Keep children and pets away.

⚠ **WARNING – Risk of burns!**

The cooking compartment gets very hot when the cleaning function is in progress.

- Never open the appliance door.
- Allow the appliance to cool down.
- Keep children at a safe distance.

⚠ The outside of the appliance gets very hot when the cleaning function is in progress.

- Never touch the appliance door.
- Allow the appliance to cool down.
- Keep children at a safe distance.

Note: The oven light does not come on during the cleaning function.

Requirement: Prepare the appliance for the cleaning function. → *Page 24*

1. Use the function selector to set **Pyrolytic self-cleaning**.
2. Use the temperature selector to set the cleaning setting.

Cleaning setting	Cleaning level	Duration in hours
1	Lightly soiled	Approx. 1:15
2	Medium	Approx. 1:30
3	High	Approx. 2:00

   Select a higher cleaning setting for very heavy or older soiling.
   The duration cannot be changed.

✔ The cleaning function starts after a few seconds and the time counts down.
✔ For safety reasons, the appliance door locks automatically once a certain temperature is reached in the cooking compartment. appears in the display.
✔ Once the cleaning function has ended, an audible signal sounds and the display shows the duration as zero.

3. Switch off the appliance.

   Once the appliance has cooled down sufficiently, the appliance door unlocks and goes out.
4. Prepare the appliance for use. → *Page 25*

17.3 Setting the cleaning function for the top oven

Ventilate the kitchen while the cleaning function is running.

⚠ **WARNING – Risk of harm to health!**

The cleaning function heats up the cooking compartment to a very high temperature so that food left over from roasting, grilling and baking will burn off. This process releases vapours, which can irritate mucous membranes.

- Keep the kitchen well ventilated while the cleaning function is running.
- Do not remain in the room for long periods.
- Keep children and pets away.

⚠ **WARNING – Risk of burns!**

The cooking compartment gets very hot when the cleaning function is in progress.

- Never open the appliance door.
- Allow the appliance to cool down.
- Keep children at a safe distance.

⚠ The outside of the appliance gets very hot when the cleaning function is in progress.

- Never touch the appliance door.
- Allow the appliance to cool down.
- Keep children at a safe distance.

Note: The oven light does not come on during the cleaning function.

Requirements

- Prepare the appliance for the cleaning function. → *Page 24*
- Switch off the main oven during the cleaning function.

1. Use the function selector to set **Pyrolytic self-cleaning**.
2. Use the temperature selector to set the cleaning setting.

Cleaning setting	Cleaning level	Duration in hours
1	Lightly soiled	Approx. 1:15
2	Medium	Approx. 1:30
3	High	Approx. 2:00

Select a higher cleaning setting for very heavy or older soiling.
The duration cannot be changed.

✔ The cleaning function starts after a few seconds and the time counts down.
✔ For safety reasons, the appliance door locks automatically once a certain temperature is reached in the cooking compartment. appears in the display.
✔ Once the cleaning function has ended, an audible signal sounds and the display shows the duration as zero.

3. Switch off the appliance.

   Once the appliance has cooled down sufficiently, the appliance door unlocks and goes out.
4. Prepare the appliance for use. → *Page 25*

17.4 Preparing the appliance for use following the cleaning function

1. Allow the appliance to cool down.
2. Wipe off any ash that has been left behind in the cooking compartment and around the appliance door with a damp cloth.
3. Remove white residues with lemon juice.

   Note: White residues on the enamel surfaces may be caused by heavy soiling. These food residues are harmless. The deposits do not compromise the functionality of the appliance.
4. Attach the shelf supports.
   → *"Shelf supports", Page 25*

18 Shelf supports

To clean the rails and the cooking compartment, or to replace the rails, you can remove these.

18.1 Detach the rails in the main cooking compartment

⚠ **WARNING – Risk of burns!**
The shelf supports get very hot
- Never touch the shelf supports when hot.
- Always allow the appliance to cool down.
- Keep children at a safe distance.

1. Lift the rail forwards slightly ① and detach it ②.
2. Pull the whole rail to the front ③ and remove it.

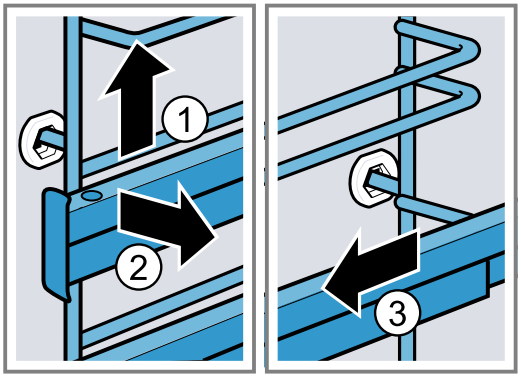

18.2 Attaching the rails in the main cooking compartment

Notes

- The rails only fit on the right or left.
- For both pull-out rails, ensure that you can pull them forwards and out.

1. First, push the rail into the middle of the rear socket ① until the rail rests against the cooking compartment wall, and then push this back ②.
2. Push the rail into the front socket ③ until the rail also rests against the cooking compartment wall, and then press this downwards ④.

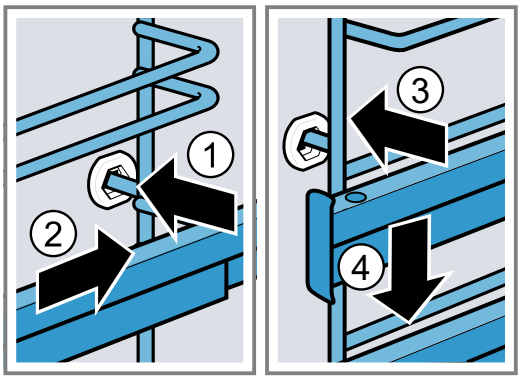

18.3 Removing the pull-out rail

⚠ **WARNING – Risk of burns!**
The shelf supports get very hot
- Never touch the shelf supports when hot.
- Always allow the appliance to cool down.
- Keep children at a safe distance.

ATTENTION!
The self-cleaning surfaces in the cooking compartment may be damaged by detaching and attaching the pull-out rails.
- Detach the rails before detaching or attaching the pull-out rails.

Notes
- Depending on the appliance type, you must change the basic settings for the telescopic rails for appliances with rails and pull-out rails.
→ *"Basic settings", Page 19*
- If necessary, you can use pull-out rails on all levels.

1. Push on the tab marked **PUSH** behind the rail, and push the rail to the rear.

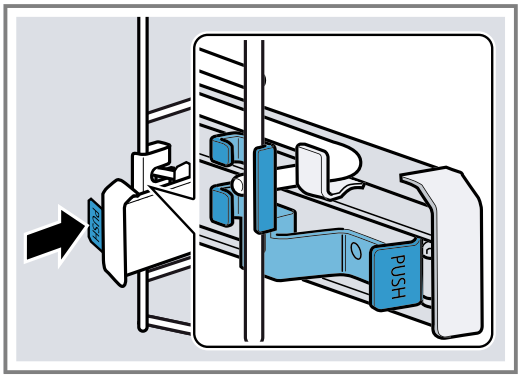

2. Keep the **PUSH** tab pushed back ① and swing the rail outwards ②.

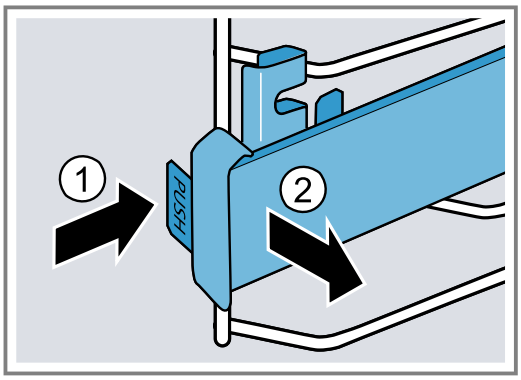

3. Pull the rail out towards the front until the retainer at the back unhooks.

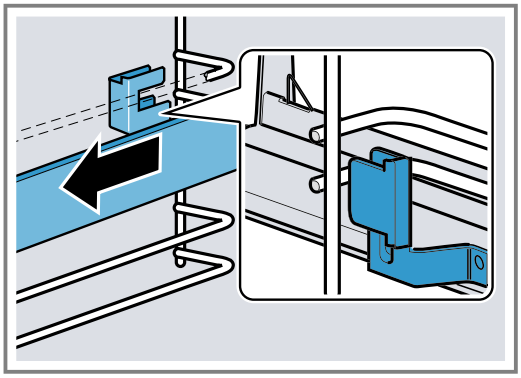

4. Remove the pull-out rail.

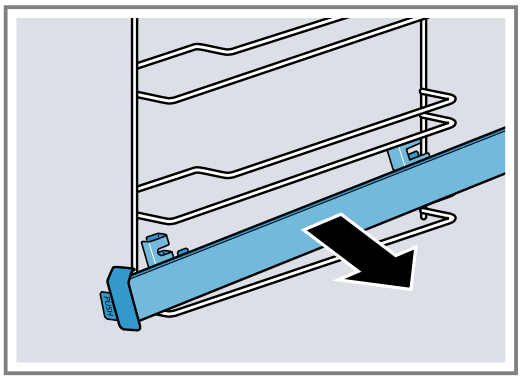

5. Clean the pull-out rail.
→ *"Cleaning products", Page 22*

18.4 Attaching the pull-out rail

Note: The pull-out rails only fit on the right or left. Make sure when you fit them that you can pull them out towards the front.

1. Insert the pull-out rail between the two bars.

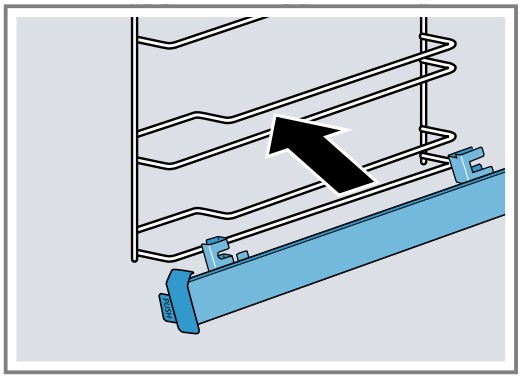

2. Push the retainer [a] in between the lower and the upper bar.

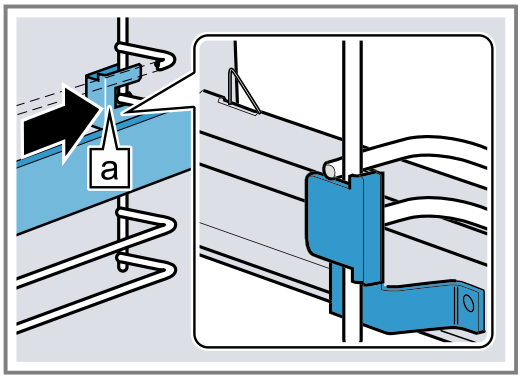

3. Keep the **PUSH** tab pushed in ① and swing the pull-out rail inwards until the front retainer [a] is located between the two bars ②.
   – Release the **PUSH** tab.

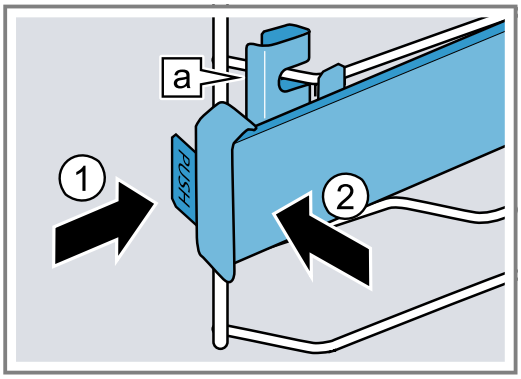

✔ The retainer [a] clicks into place.

4. Pull the pull-out rail out as far as it will go and slide it back in.

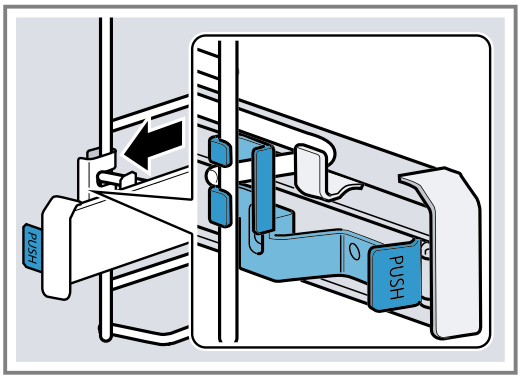

18.5 Detaching the rails in the top cooking compartment

⚠ **WARNING – Risk of burns!**

The shelf supports get very hot

- ▸ Never touch the shelf supports when hot.
- ▸ Always allow the appliance to cool down.
- ▸ Keep children at a safe distance.

1. Lift the rail forwards slightly ① and detach it ②.
2. Pull the rail to the front ③ and remove it ④.

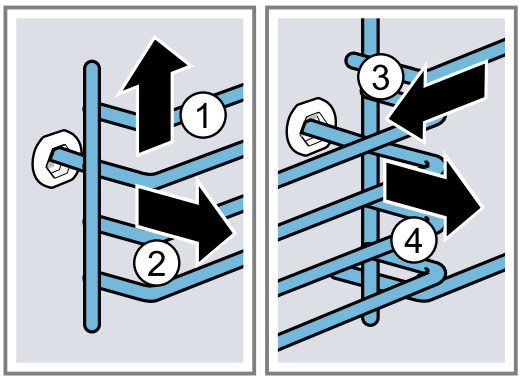

18.6 Attaching the rails in the top cooking compartment

Notes

- The rails only fit on the right or left.
- For both shelf supports, ensure that the hooks that are attached at the rear are pointing upwards.

1. First, push the rail into the middle of the rear socket ① until the rail rests against the cooking compartment wall, and then push this back ②.
2. Push the rail into the front socket ③ until the rail also rests against the cooking compartment wall, and then press this downwards ④.

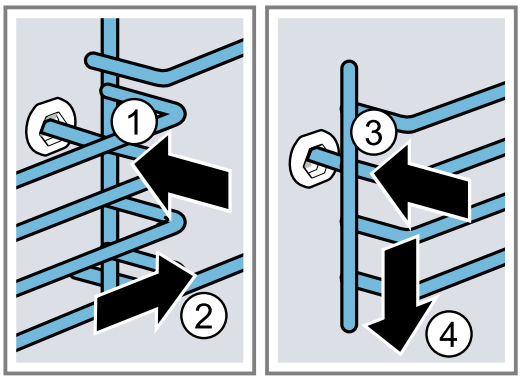

19 Appliance door

To ensure that your appliance retains its appearance and remains fully functioning for a long time, you can detach the appliance door and clean it.

19.1 Detaching the lower appliance door

⚠ **WARNING – Risk of injury!**

Components inside the appliance door may have sharp edges.

- ▸ Wear protective gloves.

The hinges on the appliance door move when the door is opened and closed, which could trap your fingers.

- ▸ Keep your hands away from the hinges.

1. Open the appliance door fully and push in the direction of the appliance.

2. ⚠ **WARNING – Risk of injury!**
When the hinges are not secured, they can snap shut with great force.
- Make sure that the locking levers are always either fully closed or (when detaching the oven door) fully open.

Open the locking levers on the left- and right-hand hinges.

Locking levers opened	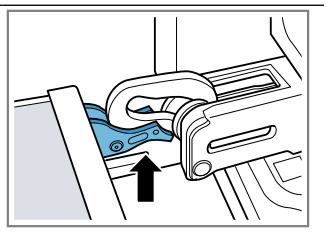 The hinge is now secured and cannot snap shut.
Locking levers closed	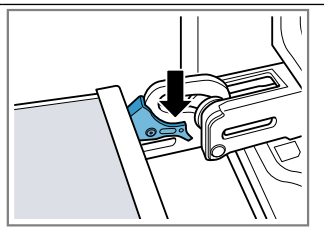 The appliance door is secured and cannot be detached.

✔ The locking levers are open. The hinges are now secured and cannot snap shut.

3. Close the appliance door fully ①. Grab hold of the appliance door with both hands (on the left and right) and pull it upwards and out ②.

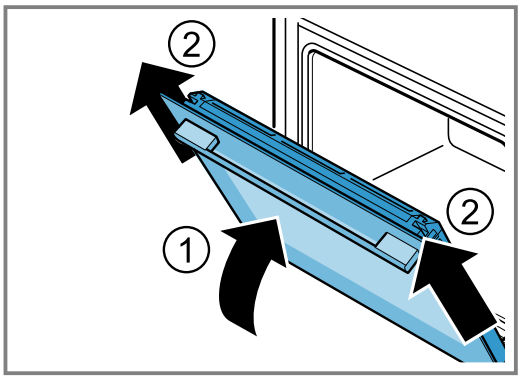

4. Carefully place the appliance door on a level surface.

19.2 Attaching the lower appliance door

⚠ **WARNING – Risk of injury!**
The hinges on the appliance door move when the door is opened and closed, which could trap your fingers.
- Keep your hands away from the hinges.

When the hinges are not secured, they can snap shut with great force.
- Make sure that the locking levers are always either fully closed or (when detaching the oven door) fully open.

1. **Note:** Ensure that the appliance door slides onto the hinges without any resistance. If you feel any resistance, check whether you are sliding it in at the correct opening.
Slide the appliance door straight onto the two hinges. Slide the appliance door on as far as it will go.

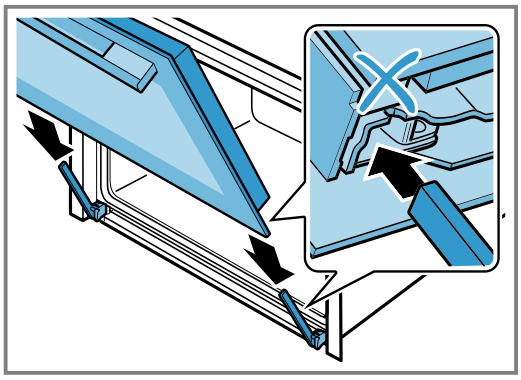

2. Using both hands, press down on the left and right of the door cover from above to check whether the appliance has been pushed in as far as it will go.

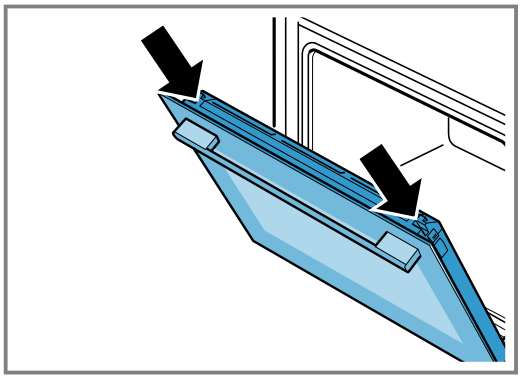

3. Open the appliance door fully.
4. Close the locking levers on the left- and right-hand hinges.

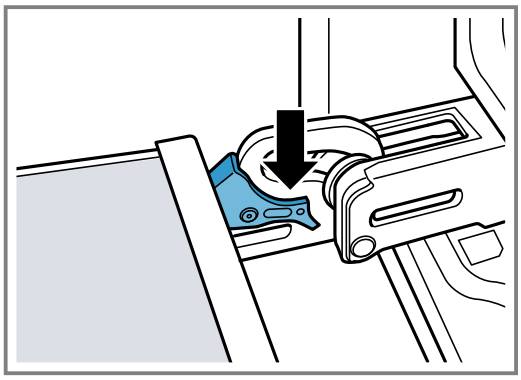

✔ The locking levers are closed. The appliance door is secured and cannot be detached.

5. Close the appliance door.

19.3 Removing the door panes from the lower the appliance door

⚠ **WARNING – Risk of injury!**
The hinges on the appliance door move when the door is opened and closed, which could trap your fingers.
- Keep your hands away from the hinges.

Components inside the appliance door may have sharp edges.
- Wear protective gloves.

1. Open the appliance door slightly.
2. Push on the left- and right-hand side of the door cover from the outside ① until it is released.
3. Remove the door cover ②.

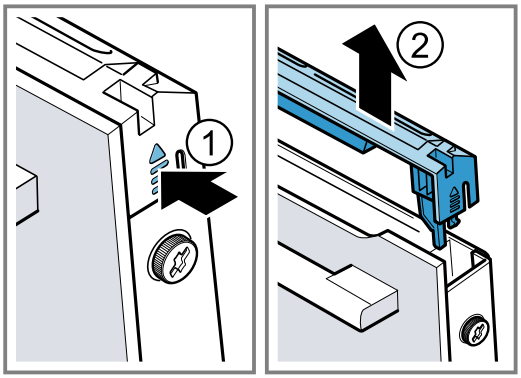

4. Clean the door cover.
   → *"Suitable cleaning agents", Page 22*
5. Undoing and removing the left- and right-hand screws on the appliance door ①
6. Place a folded-up tea towel in the appliance door. Pull the front pane up and out ②.

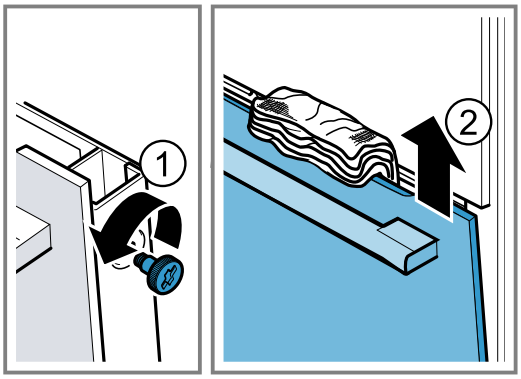

7. Set the front pane down on a level surface with the door handle facing down.
8. Press the intermediate pane against the appliance with one hand while pushing the left- and right-hand retainers [a] upwards. Do not detach the retainers [a].

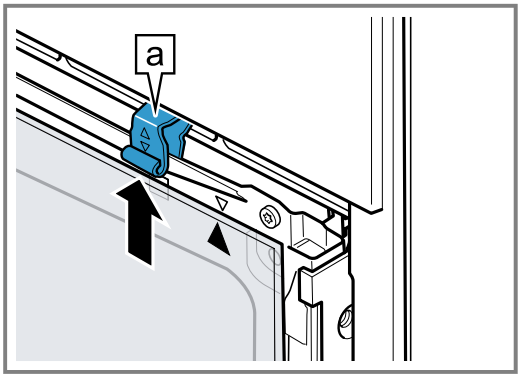

9. Remove the intermediate pane.
10. ⚠ **WARNING – Risk of injury!**
    Scratched glass in the appliance door may develop into a crack.
    - Do not use glass scrapers, sharp or abrasive cleaning aids, or harsh cleaning products.

    Clean the removed door panes on both sides with glass cleaner and a soft cloth.
11. Clean the appliance door.
    → *"Suitable cleaning agents", Page 22*
12. Dry the door panes and refit them.
    → *"Installing the door panes for the lower the appliance door ⊟", Page 29*

19.4 Installing the door panes for the lower the appliance door ⊟

⚠ **WARNING – Risk of injury!**
The hinges on the appliance door move when the door is opened and closed, which could trap your fingers.
- Keep your hands away from the hinges.

Components inside the appliance door may have sharp edges.
- Wear protective gloves.

1. Turn the intermediate pane until the arrow [a] is in the top right.

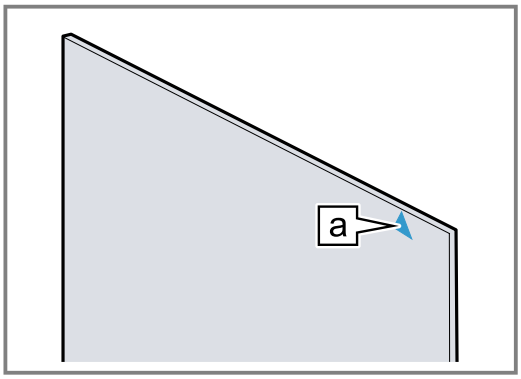

2. Insert ① the intermediate pane into the retainer [a] at the bottom and push it in firmly at the top.
3. Push the left- and right-hand retainer [a] downwards until the intermediate pane is clamped ②.

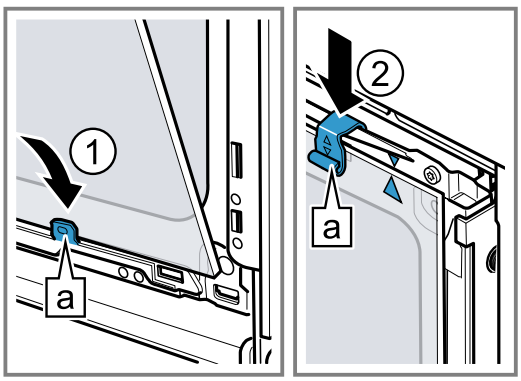

4. Attach the front pane downwards into the left- and right-hand retainers [a] ①.

5. Push the front pane to the appliance until the left- and right-hand hook [a] is opposite the support [b] ②.

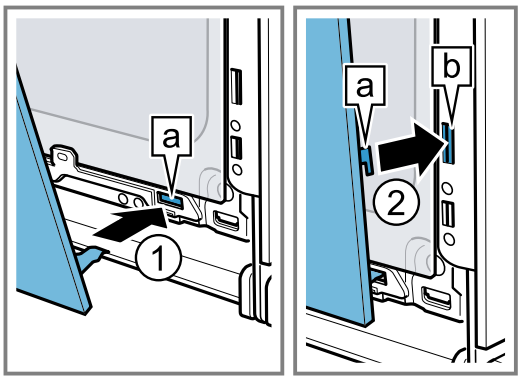

6. Push the front pane in at the bottom ① until you hear it click into place.
7. Open the appliance door slightly and remove the tea towel.
8. Screw both screws back in on the left and right of the appliance door.
9. Put the door cover in position and push down on it ② until you hear it click into place.

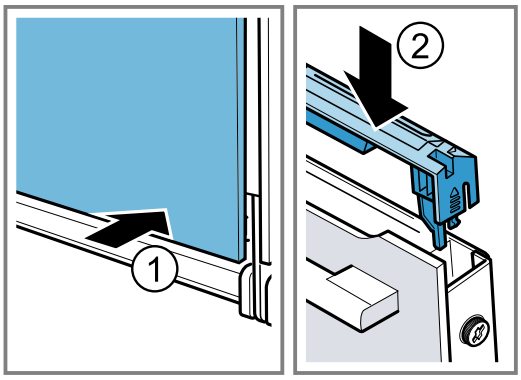

10. Close the appliance door.

Note: Do not use the cooking compartment again until the door panes have been correctly fitted.

19.5 Detaching the upper appliance door

⚠ **WARNING – Risk of injury!**
The hinges on the appliance door move when the door is opened and closed, which could trap your fingers.
- Keep your hands away from the hinges.

1. ⚠ **WARNING – Risk of injury!**
When the hinges are not secured, they can snap shut with great force.
- Make sure that the locking levers are always either fully closed or (when detaching the oven door) fully open.

Open the locking levers on the left- and right-hand hinges.

Locking levers opened	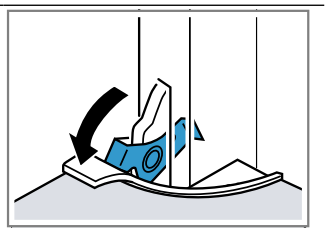 The hinge is now secured and cannot snap shut.
Locking levers closed	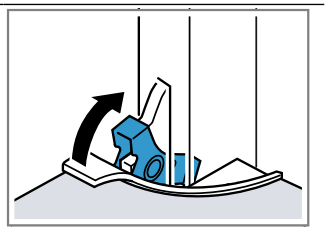 The appliance door is secured and cannot be detached.

✔ The locking levers are open. The hinges are now secured and cannot snap shut.

2. Close the appliance door fully ①. Grab hold of the appliance door with both hands (on the left and right) and pull it upwards and out ②.

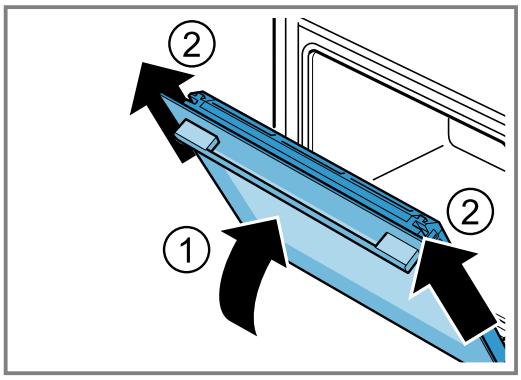

3. Carefully place the appliance door on a level surface.

19.6 Attaching the upper appliance door

⚠ **WARNING – Risk of injury!**
The hinges on the appliance door move when the door is opened and closed, which could trap your fingers.
- Keep your hands away from the hinges.

When the hinges are not secured, they can snap shut with great force.
- Make sure that the locking levers are always either fully closed or (when detaching the oven door) fully open.

1. **Note:** Ensure that the appliance door slides onto the hinges without any resistance. If you feel any resistance, check whether you are sliding it in at the correct opening.

   Slide the appliance door straight onto the two hinges. Slide the appliance door on as far as it will go.

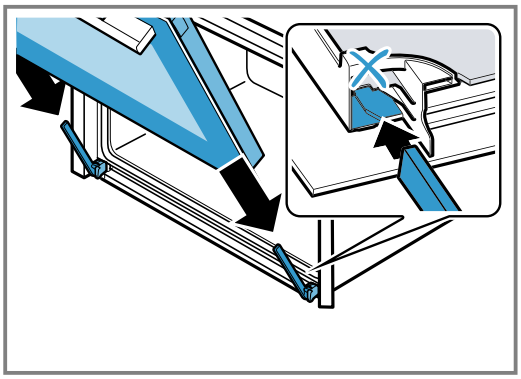

2. Open the appliance door fully.
3. Close the locking levers on the left- and right-hand hinges.

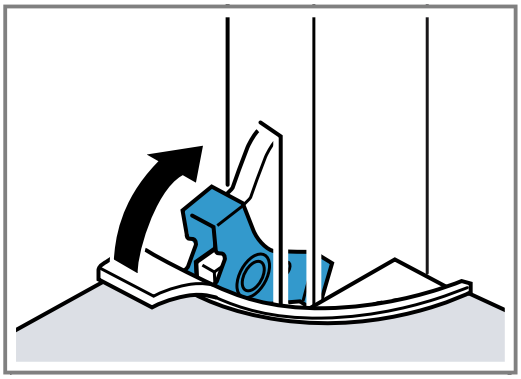

✔ The locking levers are closed. The appliance door is secured and cannot be detached.

4. Close the appliance door.

19.7 Removing the door panes from the upper appliance door

⚠ **WARNING – Risk of injury!**

The hinges on the appliance door move when the door is opened and closed, which could trap your fingers.

▸ Keep your hands away from the hinges.

Components inside the appliance door may have sharp edges.

▸ Wear protective gloves.

1. Open the appliance door fully.
2. Open the locking levers on the left- and right-hand hinges ①.

✔ The locking levers are open. The hinges are now secured and cannot snap shut.

3. Close the appliance door fully ②. Grab hold of the appliance door with both hands (on the left and right) and pull it upwards and out ③.

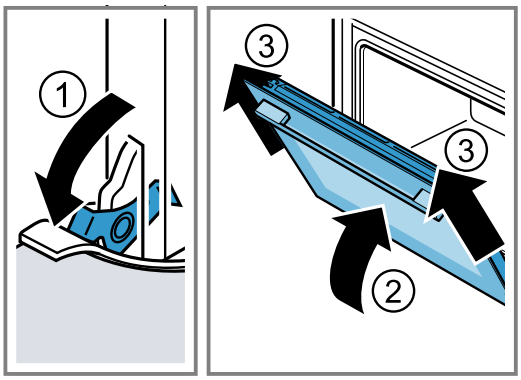

4. Carefully place the appliance door on a level surface.
5. Loosen the screws on the left- and right-hand side of the door cover and remove these ①.
6. Remove the door cover ②.

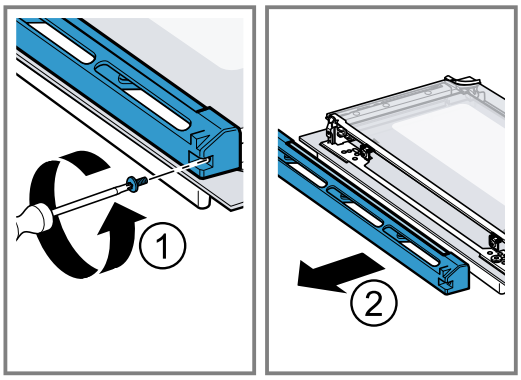

7. Remove the rail ①.
8. Remove the inner pane ② and set it down carefully on a flat surface.

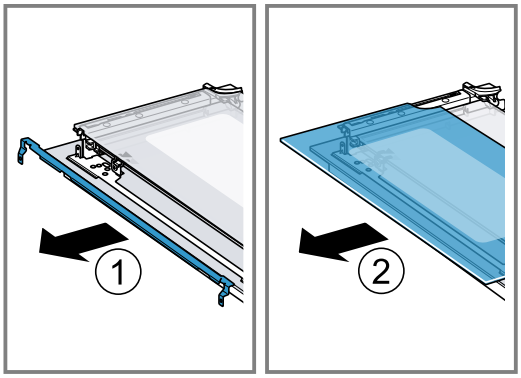

9. Loosen the screw on the left- and right-hand spacers [a] ① and remove both spacers ②.

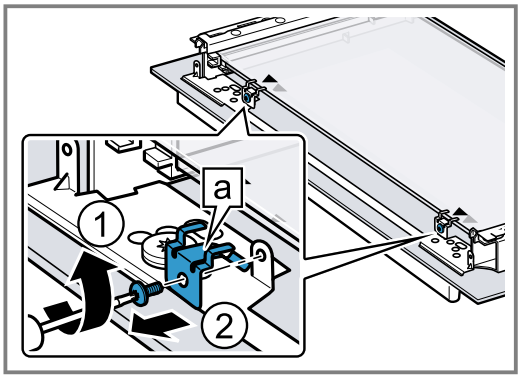

10. Pull out the upper intermediate pane ① and set it down carefully on a flat surface.
11. Pull out the next intermediate pane ② and set it down carefully on a flat surface.

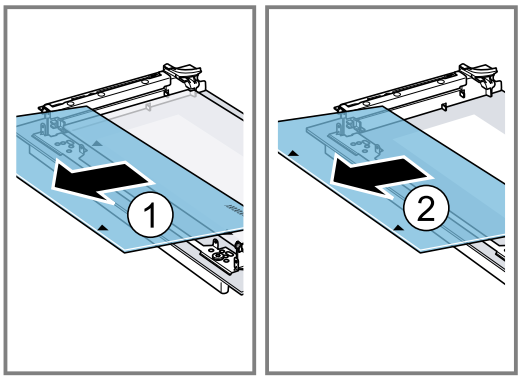

12. ⚠ **WARNING – Risk of injury!**
Scratched glass in the appliance door may develop into a crack.
- Do not use glass scrapers, sharp or abrasive cleaning aids, or harsh cleaning products.

Clean the removed door panes on both sides with glass cleaner and a soft cloth.
13. Clean the appliance door.
→ *"Suitable cleaning agents", Page 22*
14. Dry the door panes and refit them.
→ *"Installing the door panes for the upper the appliance door ⊟", Page 32*

19.8 Installing the door panes for the upper the appliance door ⊟

⚠ **WARNING – Risk of injury!**
The hinges on the appliance door move when the door is opened and closed, which could trap your fingers.
- Keep your hands away from the hinges.

Components inside the appliance door may have sharp edges.
- Wear protective gloves.

1. Slide in an intermediate pane. When doing so, ensure that the number on the intermediate pane is at the bottom right ①.
2. Slide the intermediate pane until it is in the left- and right-hand retainers [a] ②.

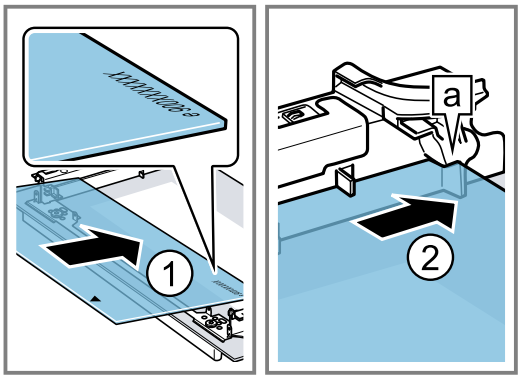

3. Push the intermediate pane upwards until it is in the retainer [a].

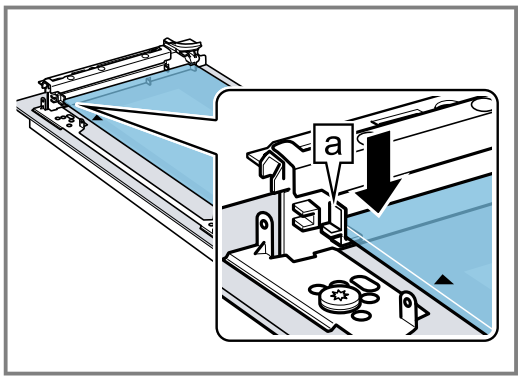

4. Slide in a second intermediate pane. When doing so, ensure that the number on the intermediate pane is at the bottom right ①.
5. Slide the intermediate pane until it is in the left- and right-hand retainers [a] ②.

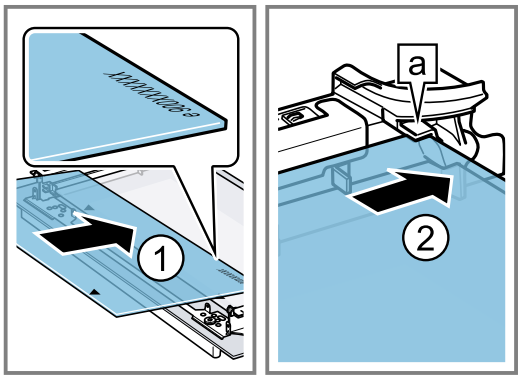

6. Push the intermediate pane upwards until it is in the retainer [a].

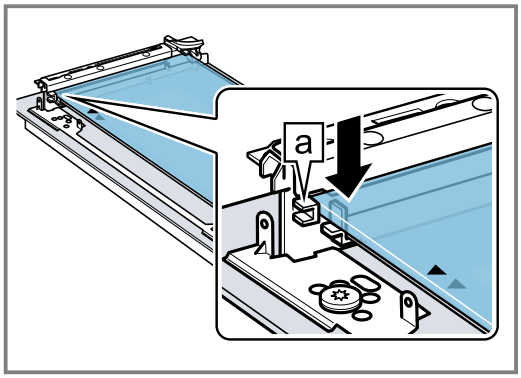

7. Place the two spacers [a] on the left- and right-hand sides onto the arrow of the upper intermediate glass pane.

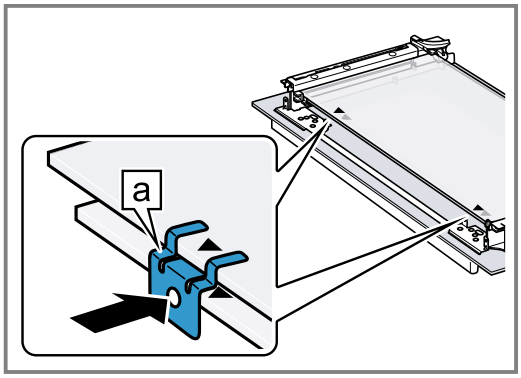

8. Secure the left- and right-hand spacers with one screw each.

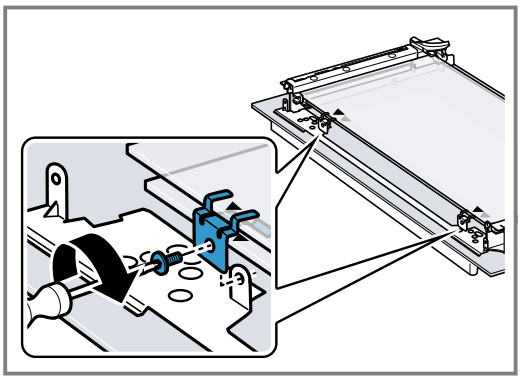

9. Slide the inner pane in. In doing so, ensure that the inner pane is in the retainer [a].

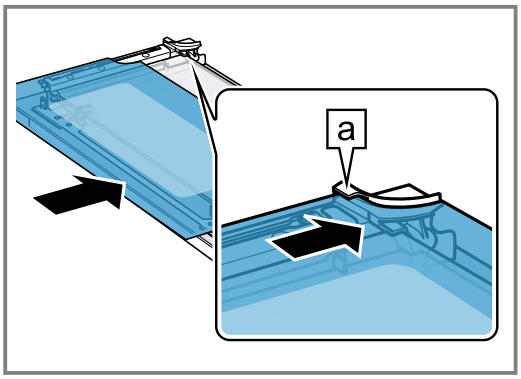

10. Push the inner pane upwards until it is in the left- and right-hand retainers [a].

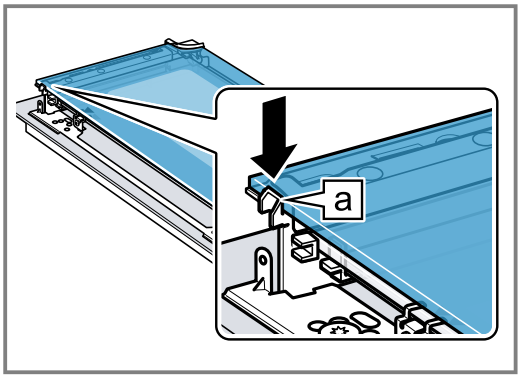

11. Place the rail in the centre of the inner pane.

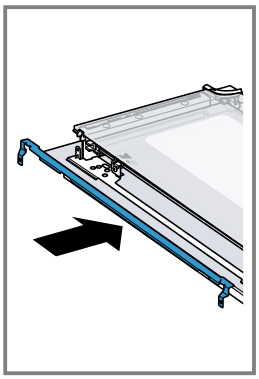

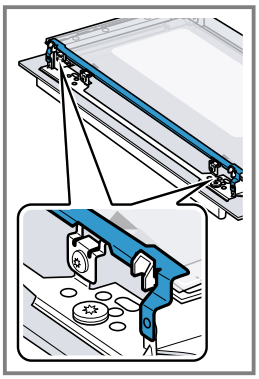

12. Attach the door cover ① and use a screw to secure it on the left- and right-hand sides ②.

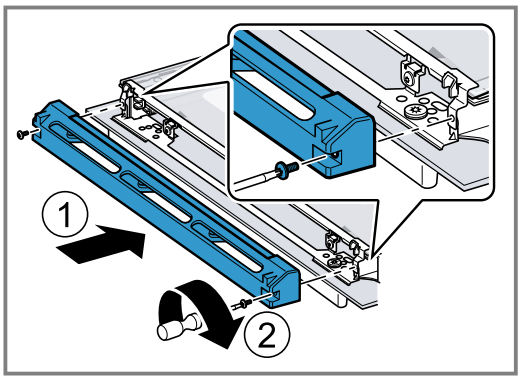

13. **Note:** Ensure that the appliance door slides onto the hinges without any resistance. If you feel any resistance, check whether you are sliding it in at the correct opening.

    Slide the appliance door straight onto the two hinges. Slide the appliance door on as far as it will go.

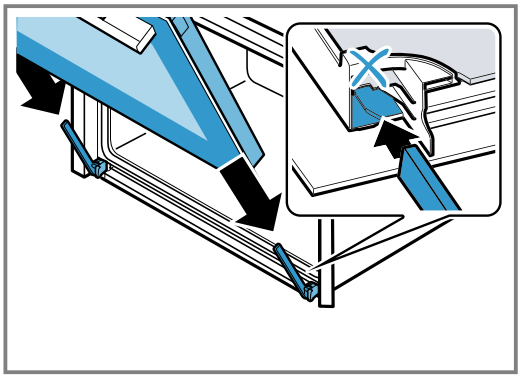

14. Open the appliance door fully.
15. Close the locking levers on the left- and right-hand hinges.

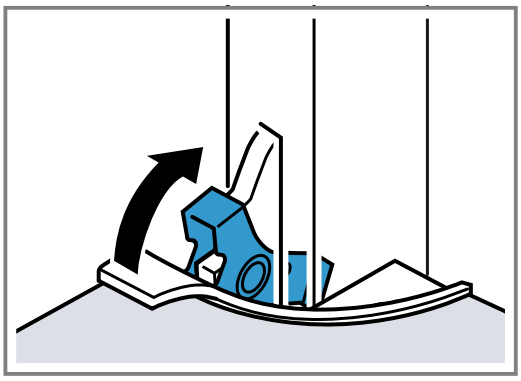

✔ The locking levers are closed. The appliance door is secured and cannot be detached.

16. Close the appliance door.

Note: Do not use the cooking compartment again until the door panes have been correctly fitted.

20 Troubleshooting

You can rectify minor faults on your appliance yourself. Read the troubleshooting information before contacting after-sales service. This will avoid unnecessary costs.

⚠ **WARNING – Risk of injury!**
Improper repairs are dangerous.
- Repairs to the appliance should only be carried out by trained specialist staff.
- If the appliance is defective, call Customer Service.

⚠ **WARNING – Risk of electric shock!**
Incorrect repairs are dangerous.
- Repairs to the appliance should only be carried out by trained specialist staff.
- Only use genuine spare parts when repairing the appliance.
- If the power cord of this appliance is damaged, it must be replaced by trained specialist staff.

20.1 Malfunctions

Fault	Cause and troubleshooting
The appliance is not working.	The circuit breaker is faulty. ▸ Check the circuit breaker in the fuse box.
	There has been a power cut. ▸ Check whether the lighting in your kitchen or other appliances are working.
Appliance is not heating, the colon flashes in the display and a *d* appears.	Demo mode is activated. **1.** Briefly disconnect the appliance from the power supply by switching the circuit breaker in the fuse box off and back on again. **2.** Deactivate demo mode within five minutes by changing the basic setting *c 1 3* to *0*. *→ "Basic settings", Page 19*
The appliance door cannot be opened; ⚷ lights up in the display.	The childproof lock locks the appliance door. ▸ Use the ⚷ button to deactivate the childproof lock. *→ "Childproof lock", Page 18*
The appliance door cannot be opened; 🔒 lights up in the display.	The cleaning function locks the appliance door. ▸ Allow the appliance to cool down until 🔒 goes out in the display. *→ "Pyrolytic self-cleaning ", Page 23*
The time flashes in the display.	There has been a power cut. ▸ Reset the time. *→ "Setting the time on the clock", Page 13*
The time does not appear in the display when the appliance is switched off.	The basic setting has been changed. ▸ Change the basic setting for the time display. *→ "Basic settings", Page 19*
⚷ lights up in the display and no settings can be made on the appliance.	Childproof lock is activated. ▸ Use the ⚷ button to deactivate the childproof lock. *→ "Childproof lock", Page 18*
h flashes in the display and the appliance will not start.	The cooking compartment is too hot for the selected operation. **1.** Switch off the appliance and allow it to cool down. **2.** Restart the operation.
F 8 appears in the display.	The maximum cooking time has been reached. To prevent an unwanted permanent operation, the appliance automatically stops heating after several hours if the settings are unchanged. ▸ Switch off the appliance. You can configure new settings if required. **Tip:** To prevent the appliance from switching off when you do not want it to, e.g. for an extremely long preparation time, set a cooking time. *→ "Time-setting options", Page 12*

Fault	Cause and troubleshooting
A message with E appears in the display, e.g. E05-32.	Electronics fault **1.** Press the ⏲ button. – If required, reset the time. ✔ If the fault was a one-off, the error message disappears. **2.** If the error message appears again, call the after-sales service. Quote the exact error message and the E no. of your appliance. → *"Customer Service", Page 36*
HomeConnect is not working correctly.	Different causes are possible. ▶ Go to www.home-connect.com.

20.2 Replacing the oven light bulb

If the light in the cooking compartment fails, change the oven light bulb.

Note: Heat-resistant, 25-watt, 230 V halogen bulbs are available from the after-sales service or specialist retailers. Only use these bulbs. Hold the new halogen bulbs only with a clean, dry towel. This increases the service life of the bulb.

⚠ **WARNING – Risk of burns!**

The appliance gets very hot.

- ▶ Never touch the inside surfaces of the cooking compartment or the heating elements while they are hot.
- ▶ Always allow the appliance to cool down.
- ▶ Keep children at a safe distance.

⚠ **WARNING – Risk of electric shock!**

When changing the bulb, the bulb socket contacts are live.

- ▶ Before replacing the bulb, unplug the appliance from the mains or switch off the circuit breaker in the fuse box.

Requirements

- The appliance is disconnected from the power supply.
- The cooking compartment has cooled down.
- You have a new halogen bulb to replace the old one.

1. Place a tea towel in the cooking compartment to prevent damage.
2. Turn the glass cover anti-clockwise to remove it ①.
3. Pull out the halogen bulb without turning it ②.

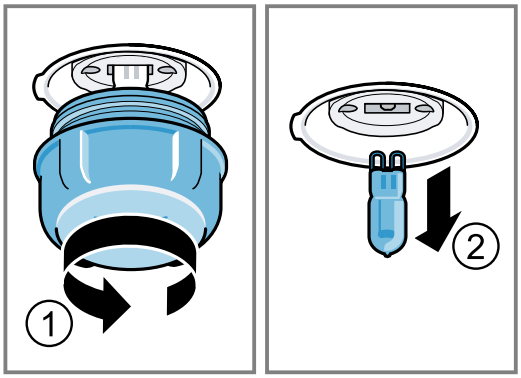

4. Insert the new halogen lamp and press it firmly into the socket.

   Make sure the pins are positioned correctly.
5. Depending on the appliance model, the glass cover may have a sealing ring. Put the sealing ring in position.
6. Screw the glass cover on.
7. Take the tea towel out of the cooking compartment.
8. Connect the appliance to the power supply.

21 Disposal

Find out here how to dispose of old appliances correctly.

21.1 Disposing of old appliance

Valuable raw materials can be reused by recycling.

1. Unplug the appliance from the mains.
2. Cut through the power cord.
3. Dispose of the appliance in an environmentally friendly manner.

   Information about current disposal methods are available from your specialist dealer or local authority.

This appliance is labelled in accordance with European Directive 2012/19/EU concerning used electrical and electronic appliances (waste electrical and electronic equipment - WEEE).
The guideline determines the framework for the return and recycling of used appliances as applicable throughout the EU.

22 Customer Service

If you have any queries on use, are unable to rectify faults on the appliance yourself or if your appliance needs to be repaired, contact Customer Service. Function-relevant genuine spare parts according to the corresponding Ecodesign Order can be obtained from Customer Service for a period of at least 10 years from the date on which your appliance was placed on the market within the European Economic Area.

Note: Under the terms of the manufacturer's warranty the use of Customer Service is free of charge.

Detailed information on the warranty period and terms of warranty in your country is available from our after-sales service, your retailer or on our website.
If you contact Customer Service, you will require the product number (E-Nr.) and the production number (FD) of your appliance.

The contact details for Customer Service can be found in the enclosed Customer Service directory or on our website.

22.1 Product number (E-Nr.) and production number (FD)

You can find the product number (E-Nr.) and the production number (FD) on the appliance's rating plate. You will see the rating plate with these numbers if you open the appliance door.

Make a note of your appliance's details and the Customer Service telephone number to find them again quickly.

23 How it works

Here, you can find the ideal settings for various types of food as well as the best accessories and cookware. We have perfectly tailored these recommendations to your appliance.

23.1 Cooking tips

Observe this information when preparing food.

- The temperature and cooking time depend on the amount of food and the recipe. Settings ranges are specified for this reason. Try using the lower values to start with.
- The setting values apply to food placed in the cooking compartment while the cooking compartment is still cold. Do not slide the accessory into the cooking compartment until it has finished preheating.
- Remove any accessories that are not being used from the cooking compartment.

23.2 Notes on baking

When baking, use the shelf positions indicated.

Baking on one level	Height
Deep baked goods or tin on wire rack	2
Flat baked goods or goods in a baking tray	3

Baking on two levels	Height
Universal pan Baking tray	3 1
Baking tins/dishes on the wire rack: First wire rack Second wire rack	Height 3 1

Baking on three levels	Height
Baking tray Universal pan Baking tray	5 3 1

Notes

- When baking on several layers, always use hot air. Baked goods that are placed in the oven at the same time will not necessarily be ready at the same time.
- Position baking tins/dishes either next to one another or offset on different shelves so that they are not directly one above the other in the cooking compartment.
- For best results, we recommend using dark-coloured metal bakeware.

23.3 Notes on roasting and grilling

The setting values are based on the assumption that unstuffed, chilled, ready-to-roast poultry, meat or fish is placed into a cold cooking compartment.

- The larger the poultry, meat or fish, the lower the cooking temperature and the longer the cooking time.
- Turn the poultry, meat or fish after approx. 1/2 to 2/3 of the time listed.
- Add a little liquid to the poultry in the cookware. Cover the bottom of the cookware with approx. 1–2 cm of liquid.
- When you turn poultry, ensure that the breast side or skin side is underneath to begin with.
- Cooking time calculation (e.g. 20 + 35): To calculate the cooking time, assume 20 minutes per 500 g of meat plus an extra 35 minutes. For 1.5 kg, the cooking time is then 95 minutes.
- Cooking time range (e.g. 10–15): Your food will be ready within the specified range of time.

Roasting and grilling on the wire rack

Roasting on the wire rack works particularly well for large poultry or for multiple pieces at the same time.

- Depending on the size and type of the food to be roasted, add up to 1/2 litre water to the universal pan.
  You can make a sauce from the juices that are caught. This also means that less smoke is produced and the cooking compartment becomes less dirty.
- Keep the appliance door closed when using the grill.
  Never grill with the appliance door open.
- Place the food to be grilled on the wire rack. In addition, slide the universal pan in at least one shelf position lower, with the slanted edge facing the appliance door. This means that any dripping fat is caught.

Roasting in cookware

When preparing food in cookware with a lid, the cooking compartment remains cleaner.
Follow the manufacturer's instructions for your roasting dishes. Glass cookware is best.

Cookware without lid

- Use a deep roasting dish.
- Place the cookware onto the wire rack.
- If you do not have any suitable cookware, use the universal pan.

Cookware with lid

- Place the cookware onto the wire rack.
- Meat, poultry and fish can also become crispy in a covered roasting dish. Use a roasting dish with a glass lid. Set a higher temperature.

⚠ **WARNING – Risk of injury!**

If hot glass cookware is placed on a wet or cold surface, the glass may shatter.

- ▸ Place hot glass ovenware on a dry mat after cooking.

⚠ **WARNING – Risk of scalding!**

Very hot steam may escape when the lid is opened after cooking. Steam may not be visible, depending on the temperature.

- ▸ Lift the lid at the rear, so that the hot steam can escape away from you.
- ▸ Keep children at a safe distance.

23.4 Food selection

Selection for the main oven

Food	Accessories/cookware	Shelf position	Type of heating	Temperature in °C/grill setting	Cooking time in mins
Victoria sponge cake	2 pcs Ø 20 cm cake tin	2		150-170[1]	15-25
Rich fruit cake	Deep 23 cm diameter tin	2		140-150	180-210
Fruit pie	20 cm diameter plate or pie tin	2		160-170	60-70
Quiche	Quiche tin (dark-coated)	3		180-200	40-55
(White) bread	Loaf tin (1 x 900 g or 2 x 450 g)	2		190-210[1]	25-40
Scones	Baking sheet on wire rack	3		190-200[2]	10-15
Biscuits	Baking sheet on wire rack	3		140-160[1]	10-20
Small cakes	12-cup tin	3		150[3]	25-35
Pavlova	Baking sheet on wire rack	3		100-110[4]	150-180
Yorkshire pudding	12-cup tin	3		200-220[5]	15-25
Pizza, home-made	Baking tray	3		190-210	20-30
Pizza, home-made, thin base	Round pizza tray	2		250-270	8-13

[1] Preheat the appliance. Do not use the rapid heating function.
[2] Preheat the appliance.
[3] Preheat the appliance for five minutes. Do not use the rapid heating function.
[4] Preheat the appliance to 150 °C using HotAir.
[5] Preheat the appliance for 20 minutes.
[6] Do not turn the food.
[7] Slide the universal pan underneath the wire rack.
[8] Add the food after approx. one hour.
[9] Preheat the appliance for 5 minutes.
[10] Preheat the appliance for three minutes.
[11] Turn the food occasionally.

Food	Accessories/cookware	Shelf position	Type of heating	Temperature in °C/grill setting	Cooking time in mins
Victoria sponge cake, 2 levels	4 pcs Ø 20 cm cake tin	3+1		150-160[2]	20-30
Biscuits, 2 or 3 levels	Baking sheet on wire rack	3+1 5+3+1		140-160[2]	15-25
Beef, top side/top rump	Cookware without lid	2		170	40+30
Lamb leg (on the bone)	Cookware without lid	2		160-170	25+15
Pork belly	Cookware without lid	2	**1.** **2.**	**1.** 170-180 **2.** 2	**1.** 30+30[6] **2.** 3-5
Chicken, whole	Wire rack	2		170-180	25+15[7]
Turkey, crown	Wire rack	2		140-150	20+25
Turkey, whole, 4–8 kg	Wire rack	1		150-160	12+12[8]
Fish, braised, whole 300 g, e. g. trout	Cookware with lid	2		170-190	25-35
Diced meat (beef, pork, lamb), 500 g	Cookware with lid	2		140	120-140
Complete meal with chicken	Wire rack + Wire rack + Universal pan	4+1		180, then 200 (Yorkshire pudding)	Chicken: (25+25) + 20 for Yorkshire pudding
Bacon rashers	Wire rack	3		3[9]	1 side 4–5 2 side 3–4
Sausages, thickness 2–4 cm	Wire rack	3		3[10]	10-20[11]
Pork, gammon joint	Cookware without lid	2		170-180	25+20[6]
Chicken, whole	Cookware without lid	2		170-180	20+20[7]

[1] Preheat the appliance. Do not use the rapid heating function.
[2] Preheat the appliance.
[3] Preheat the appliance for five minutes. Do not use the rapid heating function.
[4] Preheat the appliance to 150 °C using HotAir.
[5] Preheat the appliance for 20 minutes.
[6] Do not turn the food.
[7] Slide the universal pan underneath the wire rack.
[8] Add the food after approx. one hour.
[9] Preheat the appliance for 5 minutes.
[10] Preheat the appliance for three minutes.
[11] Turn the food occasionally.

23.5 Food selection

Selection for the top oven

Food	Accessories/cookware	Shelf position	Type of heating	Temperature in °C	Cooking time in mins
Scones	Baking sheet	1		200-210[1]	10-12
Small cakes	12-cup-tin	1		150-160[1]	25-35
Lamb chops, height 2-3 cm	Wire rack	3		3[1]	1. side 7-9 2. side 5-8
Pork sausages, thickness 2-4 cm	Wire rack	3		3	14-18

[1] Preheat the appliance.

23.6 Yoghurt

You can use your appliance to make your own yoghurt.

Preparing yoghurt

1. Remove the accessories and shelf supports from the cooking compartment.
2. Pour the previously prepared yoghurt mixture into small containers, e.g. into cups or small jars.
3. Cover the containers with foil, e. g. with cling film.
4. Place the containers on the cooking compartment floor.
5. Set the appliance according to the recommended setting.

6. After making the yoghurt, leave it to cool in the refrigerator.

Yoghurt

Selection for the main oven

Food	Accessories/cookware	Shelf position	Type of heating	Temperature in °C	Cooking time in mins
Yoghurt	Individual moulds	Cooking compartment floor		40-45	8–9 hrs

23.7 Slow cooking

Slow cooking is a technique for cooking food over a long period at low temperatures. For this reason, it is also called "low-temperature cooking".

Slow cooking food

Requirements

- Only use fresh, clean and hygienic meat without bones.
- Only start operation when the cooking compartment has fully cooled down.

1. Preheat the cooking compartment and cookware for approx. 15 minutes.
2. Sear the meat on all sides on the cooking zone at a very high heat.
3. Immediately place the meat into the pre-warmed cookware in the cooking compartment.
4. Keep the appliance door closed in order to maintain an even cooking climate.

Slow cooking

Food	Accessories/cookware	Shelf position	Type of heating	Searing time in mins	Temperature in °C	Cooking time in mins
Duck breast, 300 g each	Cookware without lid	2		6–8	95[1]	60–70
Fillet of pork, whole	Cookware without lid	2		4–6	85[1]	75–100
Beef topside, 6–7 cm thick, 1.5 kg	Cookware without lid	2		6–8	100[1]	160–220
Fillet of beef, 4–6 cm thick, 1 kg	Cookware without lid	2		6–8	85[1]	90–150
Veal medallions, 4 cm thick	Cookware without lid	2		4	80[1]	50–70
Saddle of lamb, boneless, 200 g each	Cookware without lid	2		4	85[1]	30–70

[1] Preheat the appliance.

23.8 Test dishes

These overviews have been produced for test institutes to facilitate appliance testing in accordance with EN 60350-1.

Baking

Observe this information when baking test dishes.

General information

- The settings apply to food that is placed into a cold cooking compartment.
- Observe the notes about preheating in the tables. These setting values apply without rapid heating.
- When baking, use the lower of the listed temperatures to begin with.

Shelf positions

Shelf positions for baking on two levels:

Note: Items that are placed in the oven on baking trays or in baking tins/dishes at the same time will not necessarily be ready at the same time.

- Universal pan: Level 3
  Baking tray: Level 1
- Baking tins/dishes on the wire rack
  First wire rack: Level 3
  Second wire rack: Level 1

Shelf positions for baking on three levels:

- Baking tray: Level 5
  Universal pan: Level 3
  Baking tray: Level 1

Baking with two springform cake tins:

Position baking tins/dishes either next to one another or offset on different shelves so that they are not directly one above the other in the cooking compartment.

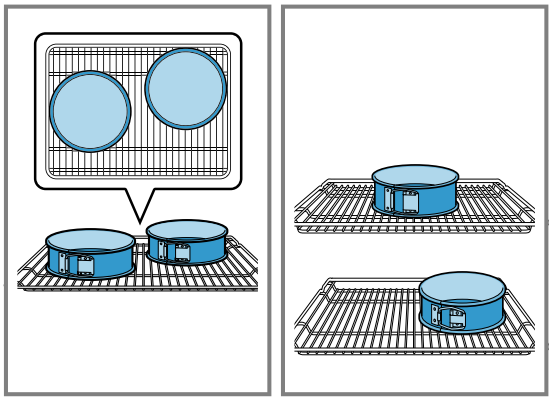

Baking

Selection for the main oven

Food	Accessories/cookware	Shelf position	Type of heating	Temperature in °C	Cooking time in mins
Viennese whirls	Baking tray	3		140-150[1]	25-35
Viennese whirls	Baking tray	3		140-150[1]	20-30
Viennese whirls, 2 levels	Universal pan + Baking tray	3 + 1		140-150[1]	25-35
Viennese whirls, 3 levels	Universal pan + Baking tray	5 + 3 + 1		130-140[1]	35-55
Small cakes	Baking tray	3		150[1]	25-35
Small cakes	Baking tray	3		140[1]	25-35
Small cakes, 2 levels	Universal pan + Baking tray	3 + 1		140[1]	30-40
Small cakes, 3 levels	Universal pan + Baking tray	5 + 3 + 1		140[1]	30-40
Hot water sponge cake	Springform cake tin, diameter 26 cm	2		160-170[2]	25-35
Hot water sponge cake	Springform cake tin, diameter 26 cm	2		160-170	30-35
Hot water sponge cake, 2 levels	Springform cake tin, diameter 26 cm	3 + 1		150-160[2]	35-50

[1] Preheat the appliance for five minutes. Do not use the rapid heating function.
[2] Preheat the appliance. Do not use the rapid heating function.

Grilling

Selection for the main oven

Food	Accessories/cookware	Shelf position	Type of heating	Temperature in °C/grill setting	Cooking time in mins
Toasting bread	Wire rack	5		3[1]	5–6

[1] Do not preheat the appliance.

Grilling

Selection for the top oven

Food	Accessories/cookware	Shelf position	Type of heating	Temperature in °C	Cooking time in mins
Browning toast	Wire rack	3		3	4-6

24 Installation instructions

Observe this information when installing the appliance.

24.1 General installation instructions

Follow these instructions before you start with the installation of the appliance.

- The safe operation of this appliance can only be guaranteed if it has been installed to a professional standard in accordance with these installation instructions. The installer shall be liable for damages incurred as a result of incorrect installation.
- Do not use the door handle for the transport or installation.
- The appliance must be transported by two people using the carry handles on the right and left.
- Check the appliance for damage after unpacking it. Do not connect the appliance if it has been damaged in transit.
- Before starting up the appliance, remove any packaging material and adhesive film from the cooking compartment and the door.
- Proceed in accordance with the installation sheets for installing accessories.
- Fitted units must be heat-resistant up to 95 °C, and adjacent unit fronts up to 70 °C.
- Do not install the appliance behind a decorative door or the door of a kitchen unit. There is a risk of overheating.
- Cut-out work on the units should be carried out before installing the appliance. Remove any shavings. Otherwise, the correct operation of electrical components may be adversely affected.
- The mains socket for the appliance must either be located in the hatched area a or outside of the area where the appliance is installed.
  Any unsecured units must be secured to the wall using a standard bracket b.

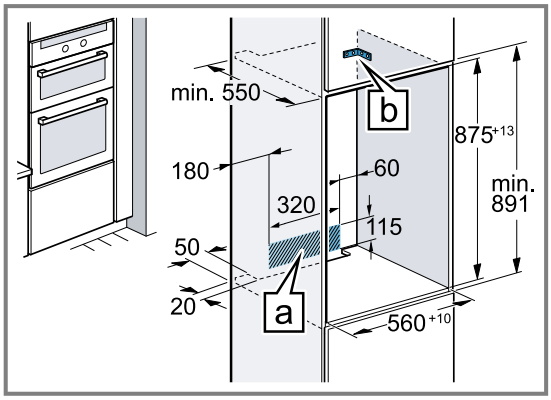

- Wear protective gloves so that you do not cut yourself. Parts that are accessible during installation may have sharp edges.
- Dimensions of the figures in mm.

⚠ WARNING – Risk of fire!

It is dangerous to use an extended power cord and non-approved adapters.

- ▶ Do not use extension cables or multiple socket strips.
- ▶ If the power cord is too short, contact Customer Service.
- ▶ Only use adapters approved by the manufacturer.

ATTENTION!

Carrying the appliance by the door handle could break it. The door handle cannot support the weight of the appliance.

- ▶ Do not carry or hold the appliance by the door handle.

24.2 Appliance dimensions

You will find the dimensions of the appliance here

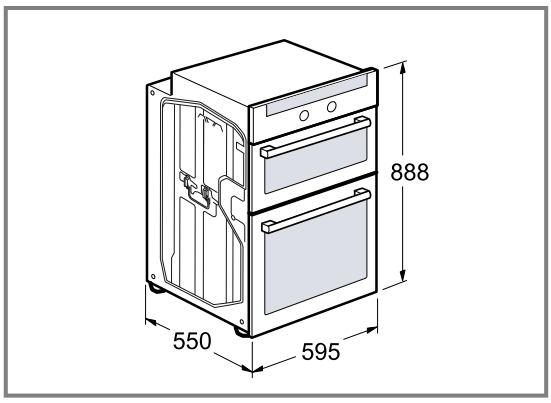

24.3 Installation in a tall unit

Observe the installation dimensions and the installation instructions when installing in a tall unit.

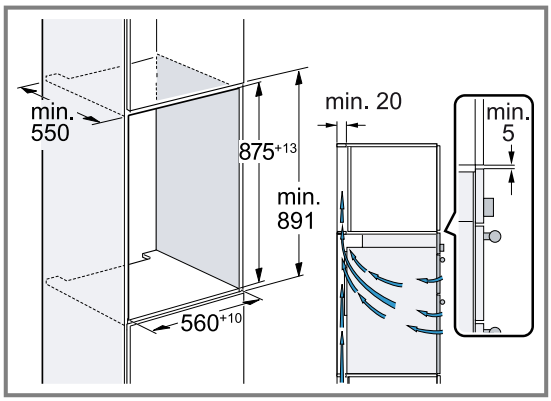

- To ventilate the appliance, there must be a gap of 20 mm between all intermediate floors and the wall.

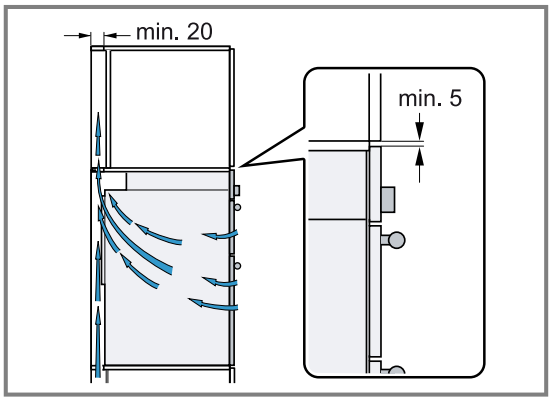

- If the tall unit has another back panel in addition to the element back panels, this must be removed.
- Only fit the appliance up to a height which allows accessories to be easily removed.

24.4 Corner installation

Observe the installation dimensions and the installation instructions when installing in a corner.

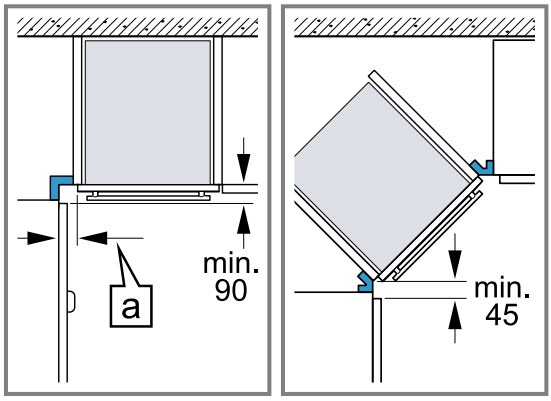

- To ensure that the appliance door can be opened, you must take the minimum dimensions into consideration when installing in a corner. The dimension a is dependent on the thickness of the unit front and the handle.

24.5 Electrical connection

In order to safely connect the appliance to the electrical system, follow these instructions.

- The appliance corresponds to protection class I and must only be operated with a protective earth connection.
- The fuse protection must correspond to the power rating specified on the appliance's rating plate and to local regulations.
- The appliance must be disconnected from the power supply whenever installation work is being carried out.
- Contact protection must be ensured during the installation.

Electrically connecting an appliance without a protective contact plug

Note: Only a licensed professional may connect the appliance. Damage caused by incorrect connection is not covered under the warranty.
An all-pole isolating switch must be integrated into the permanent electrical installation according to the installation regulations.

1. Identify the phase and neutral conductors in the socket.

   The appliance may be damaged if it is not connected correctly.
2. Connect the hob in accordance with the connection diagram.

   See the rating plate for the voltage.
3. Connect the wires of the mains power cable according to the colour coding:
   - Green/yellow = Protective conductor ⏚
   - Blue = Neutral conductor
   - Brown = Phase (external conductor)

24.6 Installing the appliance

1. Remove the transport locks on the right and left and then dispose of them.

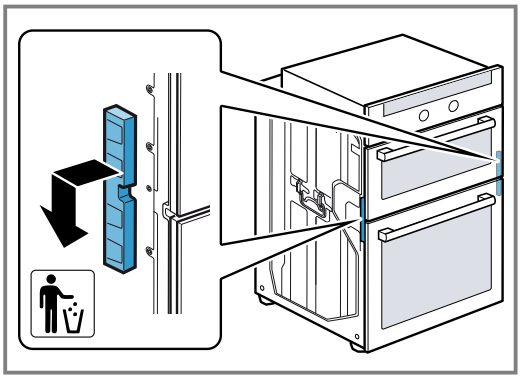

2. The appliance must be transported by two people using the carry handles on the right and left, while securing the front of the appliance with one hand.

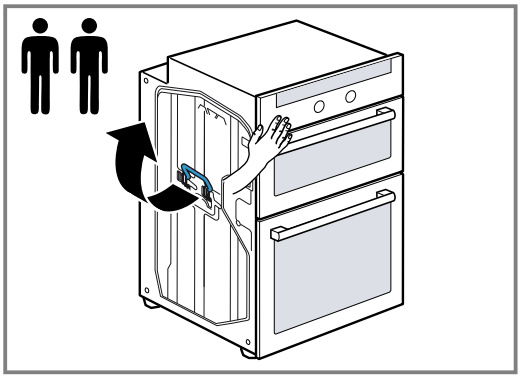

3. Place the appliance in the unit and fold the carry handles down.

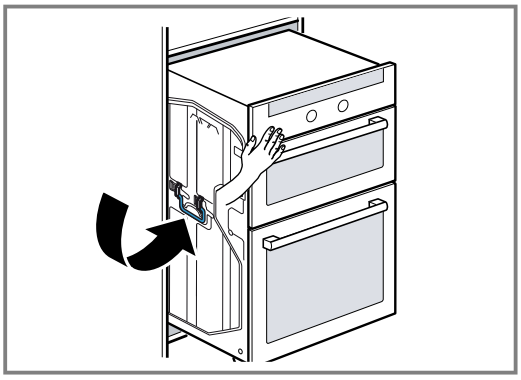

4. Push the appliance in fully.

   Do not kink or trap the connecting cable, or route it over sharp edges.

5. Centre the appliance.

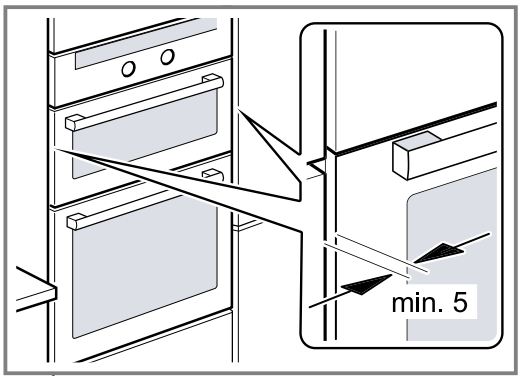

   There must be an air gap of at least 5 mm between the appliance and adjacent unit fronts.

6. Use a spirit level to adjust the appliance so that it is perfectly level.
7. Screw the appliance into place.

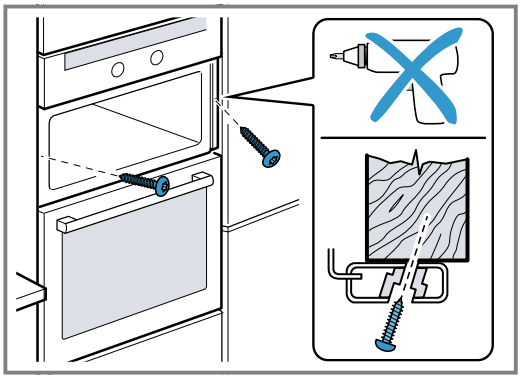

24.7 Removing the appliance

1. Disconnect the appliance from the power supply.
2. Undo the fastening screws.
3. Lift the appliance slightly and pull it out completely.

Thank you for buying a Bosch Home Appliance!

Register your new device on MyBosch now and profit directly from:

- **Expert tips & tricks for your appliance**
- **Warranty extension options**
- **Discounts for accessories & spare-parts**
- **Digital manual and all appliance data at hand**
- **Easy access to Bosch Home Appliances Service**

Free and easy registration – also on mobile phones:
www.bosch-home.com/welcome

Looking for help? You'll find it here.

Expert advice for your Bosch home appliances, help with problems or a repair from Bosch experts.
Find out everything about the many ways Bosch can support you:
www.bosch-home.com/service
Contact data of all countries are listed in the attached service directory.

Robert Bosch Hausgeräte GmbH
Carl-Wery-Straße 34
81739 München
GERMANY
www.bosch-home.com

9001580322 (010121)
en

Valid within Great Britain:
Imported to Great Britain by
BSH Home Appliances Ltd.
Grand Union House
Old Wolverton Road
Wolverton, Milton Keynes
MK12 5PT
United Kingdom