RANGEmaster

USER GUIDE & INSTALLATION INSTRUCTIONS

Professional+ FX 90 Induction

U110127 - 10a

Search Rangemaster UK

RANGEmaster

Show off your kitchen with ...

This is #MyRangemaster

Simply snap and share a picture of your kitchen and tag #MyRangemaster for the chance to win £200 of Rangemaster cookware. If selected we will also send a photographer round to professionally photograph you at home with your range. You might even feature in some of the UK's top home interest titles!

To enter all you have to do is send in photos of your Rangemaster kitchen and tell us in one sentence **what makes Rangemaster the heart of your kitchen?** Entries can be posted on our Facebook page, Instagram or Twitter by tagging @RangemasterUK and using #MyRangemaster. Or, if you prefer, simply send in your entry via e-mail to marketing@agarangemaster.co.uk.

Rangemaster will feature a number of entries on the website online gallery and on the Rangemaster Facebook page, and some kitchens may be selected to be professionally photographed.

*Terms & Conditions Apply

To enter simply

SNAP

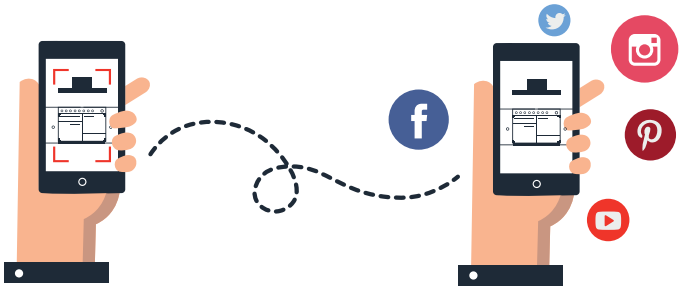

and

SHARE

#MyRangemaster

RANGEmaster COOKWARE

Our range cookers are well known for providing the best possible cooking performance and years of faithful service. However, a great cooker alone cannot guarantee perfect results every time. The other vital ingredients are of course enthusiasm and quality cookware.

We offer cookware to work perfectly with all fuel types manufactured by Rangemaster, including induction hobs. You can be assured of functionality with style, as well as the quality and meticulous attention to detail you expect from the pioneers of range cooking.

Visit www.rangemastercookshop.co.uk

*Terms & Conditions

1. This is my Rangemaster is open to residents of UK mainland only, aged 18 years & over. 2. All entries should be submitted to the advertised e-mail address, or Rangemaster UK Facebook, Instagram or Twitter page using the advertised hashtag & tag. 3. If we would like to professionally photograph your kitchen, you will be contacted via e-mail, Facebook / Twitter message or Instagram comment. 4. We cannot guarantee your kitchen will be professionally photographed. 4. Any photographs received and professional photographs taken will belong to AGA Rangemaster plc with full usage rights. E&OE.

Contents

1. Before you start... 1

Personal safety 1
Electrical connection safety 1
Peculiar smells 2
Ventilation 2
Maintenance 2
Induction and ceramic care 3
Oven care 5
Hob care 6
Cooling fan 6
Cooker care 6
Cleaning 7

2. Overview 8

The Hob 8
Pan Detector, 8
Residual Heat Indicator, H 10
Automatic Heat-up, A 10
Child Lock, 10
Low Temperature Setting, L1/L2 11
Power Boost Setting, P 11
Overheat Function 11
Multifunction Oven 12
Energy Saving Panel 14
Operating the Oven 14
Accessories 15

3. 2 Button - rotary clock 16

4. Cooking tips 19

5. Cleaning your cooker 20

6. Troubleshooting 22

7. Installation 24

Safety requirements and regulations 24
Provision of ventilation 24
Location of cooker 24
Positioning the cooker 25
Moving the cooker 25
Removing the oven door 26
Lowering the two rear rollers 26
Completing the move 26
Levelling 26
Fitting the stability bracket or chain 27
Electrical connection 28
Repositioning the cooker following connection 28
Final Checks 29
Final Fitting 29
Fitting the drawer 30
Removing the drawer 30

8. Circuit diagram 31

9. Technical data 33

1. Before you start...

Your cooker should give you many years of trouble-free cooking if installed and operated correctly. It is important that you read this section before you start.

Personal safety

This appliance is for cooking purposes only. It must not be used for other purposes, for example heating a room. Using it for any other purpose could invalidate any warranty or liability claim. Besides invalidating claims this wastes fuel and may overheat the control knobs.

- This appliance can be used by children aged from 8 years and above and persons with reduced physical, sensory or mental capabilities or lack of experience and knowledge if they have been given supervision or instruction concerning use of the appliance in a safe way and understand the hazards involved.
- Children **less** than 8 years of age should be kept away unless continuously supervised. Children shall not play with the appliance. Cleaning and user maintenance shall not be made by children without supervision.
- The cooker should not be placed on a base.
- This appliance is designed for domestic cooking only. Use for any other purpose could invalidate any warranty or liability claim.
- Before operating the oven(s) please refer to the oven shelf installation, in the Accessories section.
- The appliance and its accessible parts become hot during use and will retain heat even after you have stopped cooking. Care should be taken to avoid touching heating elements.
- A long term cooking process has to be supervised from time to time. A short term cooking process has to be supervised continuously.
- At the risk of fire **DO NOT** store items on the cooking surfaces.
- To avoid overheating, **DO NOT** install the cooker behind a decorative door.
- Accessible parts will become hot during use and will retain heat even after you have stopped cooking. Keep babies and children away from the cooker and never wear loose-fitting or hanging clothes when using the appliance.
- **DO NOT** use a steam cleaner on your cooker.
- Always keep combustible materials, e.g. curtains, and flammable liquids a safe distance away from the cooker.
- **DO NOT** spray aerosols in the vicinity of the cooker while it is on.

Electrical connection safety

A Gas Safe registered engineer should service the cooker and only approved spare parts should be used.

The electrical installation must be installed in accordance with all relevant British Standards/ Codes of Practice, BS 7671. Or with the relevant national and local regulations and with the local gas and electricity supply companies' requirements.

Otherwise, all installations must be in accordance with the relevant instructions in this booklet.

⚠ **WARNING: THE APPLIANCE MUST BE EARTHED.**

NOTE: The cooker must be connected to the correct electrical supply as stated on the voltage label on the cooker, through a suitable

cooker control unit incorporating a double pole switch, having a contact separation of at least 3 mm in all poles.

Read the instructions before installing or using this appliance.

- This appliance is heavy so take care when moving it.
- The total electrical load of the appliance is approximately 3.6 kW. The cable size used should be suitable for this load and comply with all local requirements.
- The cooker may be installed in a kitchen/ kitchen diner but **NOT** in a room containing a bath or shower.
- This cooker must be earthed.
- This cooker **MUST NOT** be connected to an ordinary domestic power point.
- It is normal for the hob control display to flash for about 2 seconds during first power setting.
- Set the clock to make sure that the oven is functional – see the relevant section in this manual.
- The appliance must be installed in accordance with the regulations in force and only in a well ventilated space.
- Failure to install the appliance correctly could invalidate any warranty or liability claims and lead to prosecution.
- **DO NOT** install the appliance on a platform.
- **DO NOT** manouvre the cooker while it is plugged into the electricity supply.
- Before electrical reconnection, check that the appliance is electrically safe.

Peculiar smells

When you first use your cooker it may give off an odour. This should stop after use.

Before using for the first time, make sure that all packing materials have been removed and then, to dispel manufacturing odours, turn the ovens to 200 °C and run for at least an hour.

Before using the grill for the first time you should also turn on the grill and run for 30 minutes with the grill pan in position, pushed fully back and the grill door open.

Make sure the room is well ventilated to the outside air (see 'Ventilation' below). People with respiratory or allergy problems should vacate the area for this brief period.

Ventilation

The use of a cooking appliance results in the production of heat and moisture in the room in which it is installed. Therefore, make sure that the kitchen is well ventilated: keep natural ventilation holes open or install a powered cookerhood that vents outside. If you have several hotplates/burners on, or use the cooker for a long time, open a window or turn on an extractor fan

Maintenance

- Only a qualified service engineer should service the appliance and only approved spare parts should be used. It is recommended that this appliance is serviced annually.
- Before replacing the bulb, turn off the power supply and make sure that the oven is cool.
- **DO NOT** use cooking vessels on the hotplate that overlap the edges.
- Unless specified otherwise in this guide, always allow the cooker to cool and then switch it off at the mains before cleaning or carrying out any maintenance work.

- **DO NOT** use the control knobs to manoeuvre the cooker.
- **NEVER** operate the cooker with wet hands.
- **DO NOT** use a towel or other bulky cloth in place of a glove – it might catch fire if brought into contact with a hot surface.
- **DO NOT** use hotplate protectors, foil or hotplate covers of any description. These may affect the safe use of your hotplate burners and are potentially hazardous to health.
- **NEVER** heat unopened food containers. Pressure build up may make the containers burst and cause injury.
- **DO NOT** use unstable saucepans. Always make sure that you position the handles away from the edge of the hotplate.
- **NEVER** leave the hotplate unattended at high heat settings. Pans boiling over can cause smoking, and greasy spills may catch on fire. Use a deep fat thermometer whenever possible to prevent fat overheating beyond the smoking point.
- Unattended cooking on a hob with fat or oil can be dangerous and may result in fire.
- **NEVER** leave a chip pan unattended. Always heat fat slowly, and watch as it heats. Deep fry pans should be only one third full of fat.
- **NEVER** try to move a pan of hot fat, especially a deep fat fryer. Wait until the fat is cool. Filling the pan too full of fat can cause spill over when food is added. If you use a combination of oils or fats in frying, stir them together before heating, or as the fats melt.
- Foods for frying should be as dry as possible. Frost on frozen foods or moisture on fresh foods can cause hot fat to bubble up and over the sides of the pan. Carefully watch for spills or overheating of foods when frying at high or medium high temperatures.
- **DO NOT** use the top of the flue (the slot along the back of the cooker) for warming plates, dishes, drying tea towels or softening butter.
- **DO NOT** use water on grease fires and never pick up a flaming pan. Turn the controls off and then smother a flaming pan on a surface unit by covering the pan completely with a well fitting lid or baking tray. If available, use a multi-purpose dry chemical or foam-type fire extinguisher.
- **DO NOT** modify this appliance. This appliance is not intended to be operated by means of external timer or separated remote-control system.
- If flammable materials are stored in the drawer, oven(s) or grill(s) it may explode and result in fire or property damage.

Induction and ceramic care

- **IMPORTANT INFORMATION FOR PACEMAKER AND IMPLANTED INSULIN PUMP USERS:** The functions of this hob comply with the applicable European standards on electromagnetic interference. If you are fitted with a pacemaker or implanted insulin pump and are concerned please consult your doctor for medical advice.
- When the hob is in use keep magnetic items away, such as credit and debit cards, floppy disk, calculators, etc.
- **To fully utilise the power of your induction hob and to ensure longevity of performance, we recommend the use of AGA Rangemaster Induction Pots and Pans. If you decide to purchase an alternative set of pans for use on your induction cooker, we would strongly recommend that composite aluminium pans with steel inserts, example shown**

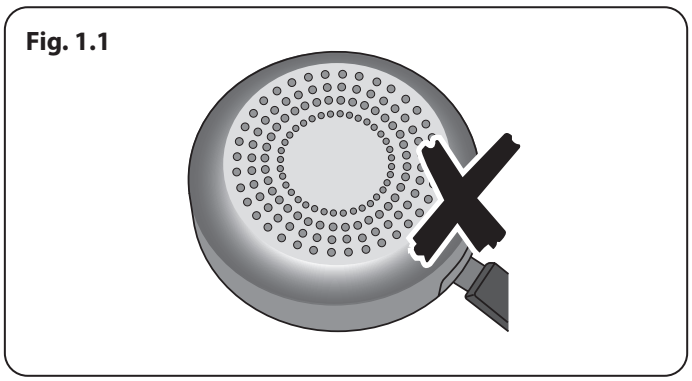

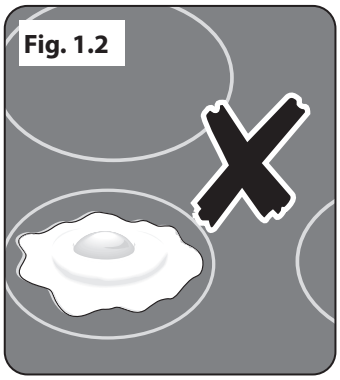

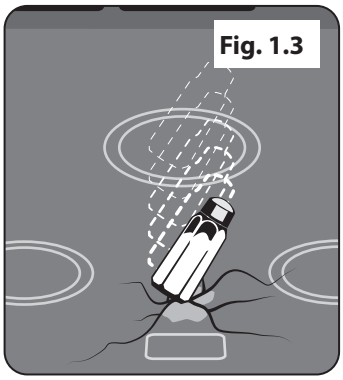

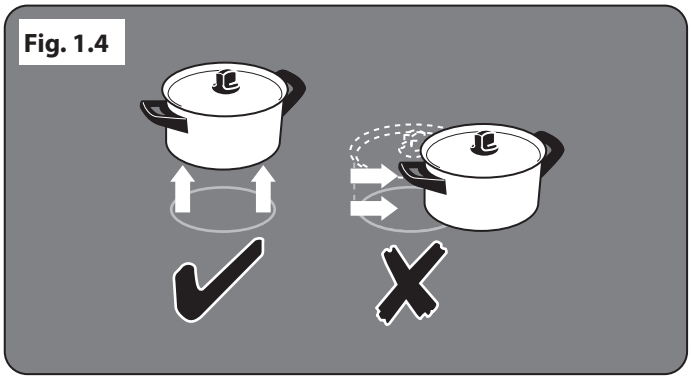

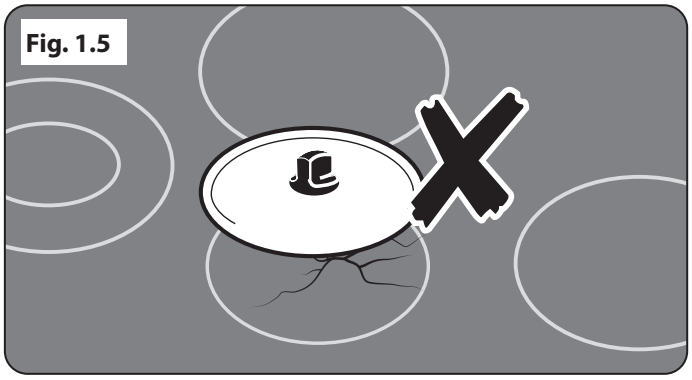

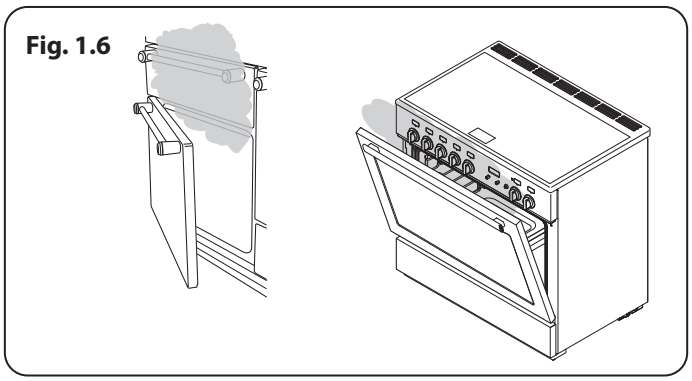

Fig. 1.1, are avoided. This type of pan construction can significantly reduce the lifetime and performance of your induction cook top.

- Take care when touching the marked cooking areas of the hob.
- Use adequately sized pans with flat bottoms that are large enough to cover the surface of the hotplate heating area. Using undersized pans will expose a portion of the hotplate surface to direct contact and may result in the ignition of clothing
- Only certain types of glass, glass-ceramic, earthenware or other glazed containers are suitable for use on the warming zone; others may break because of the sudden change in temperature.
- Only certain types stainless steel, enamelled steel pans or cast iron pans with enamelled bases are suitable for induction hob cooking.
- Take care **NOT** to scratch the surface when placing cookware on the glass panel.
- Only certain types of glass, glass-ceramic, earthenware or other glazed containers are suitable for hotplate cooking; others may break because of the sudden change in temperature. **NEVER** cook directly on the hob surface (**Fig. 1.2**).
- **DO NOT** leave the hob zones switched on unless being used for cooking.
- **DO NOT** stand or rest heavy objects on the hob. Although the ceramic surface is very strong, a sharp blow or sharp falling object (e.g. a salt cellar) might cause the surface to crack or break (**Fig. 1.3**).
- Should a crack appear in the surface, disconnect the appliance immediately from the supply and arrange for its repair.
- Always **LIFT** pans off the hob. Sliding pans may cause marks and scratches **(Fig. 1.4)**.

- Take care **NOT TO PLACE HOT LIDS** onto the Hob surface (**Fig. 1.5**). Lids that have been used to cover a hot pan can "stick" or create a "vacuum" effect to the Glass Hob. Should this occur, **DO NOT** attempt to lift the lid off the glass surface, this may damage the glass. Instead slide the lid to the edge of the hob surface and remove, taking care not to scratch the hob surface. Alternatively wait until the lid has cooled to room temperature, the vacuum has been released, then remove the lid by lifting it from the hob surface.
- **DO NOT** place anything between the base of the pan and the hob surface (e.g. asbestos mats, aluminium foil, wok stand).
- Take care **NOT** to place metallic objects such as knives, forks, spoons and lids on the hob surface since they can get hot.
- We recommend that you avoid wiping any surface unit areas until they have cooled and the indicator light has gone off. Sugar spills are the exception to this (see 'Cleaning your Cooker'). After cleaning, use a dry cloth or paper towel to remove any cleaning cream residue.
- The ceramic surface should be washed after use in order to prevent it from becoming scratched or dirty. Clean the hob with caution as some cleaners can produce noxious fumes if applied to a hot surface..
- **DO NOT** leave the hob unattended. Care should be taken to not allow your cookware to boil dry. It will damage your cookware and Induction Glass Hob.
- After use, switch off the hob element by its control. **DO NOT** rely on the pan detector.

Oven care

- When the oven is not in use and before attempting to clean the cooker always be certain that the control knobs are in the **OFF** position.
- Use oven gloves to protect your hand from potential burns.
- Cooking high moisture content foods can create a 'steam burst' when the oven door is opened (**Fig. 1.6**). When opening the oven, stand well back and allow any steam to disperse.
- The inside door face is constructed with toughened safety glass. Take care **NOT** to scratch the surface when cleaning the glass panel.
- Accidental damage may cause the door glass panel to fracture.
- Keep oven vent ducts unobstructed.
- **DO NOT** use harsh abrasive cleaners or sharp metal scrapers to clean the oven door glass since they can scratch the surface, which may result in shattering of the glass.
- Make sure the shelves are pushed firmly to the back of the oven. **DO NOT** close the door against the oven shelves.
- **DO NOT** use aluminium foil to cover shelves, linings or the oven roof.
- When the oven is on, **DO NOT** leave the oven door open for longer than necessary, otherwise the control knobs may become very hot.
- **DO NOT** use the timed oven if the adjoining oven is already warm.
- **DO NOT** place warm food in the oven to be timed.
- **DO NOT** use a timed oven that is already warm.
- Use dry oven gloves when applicable – using damp gloves might result in steam burns when you touch a hot surface.

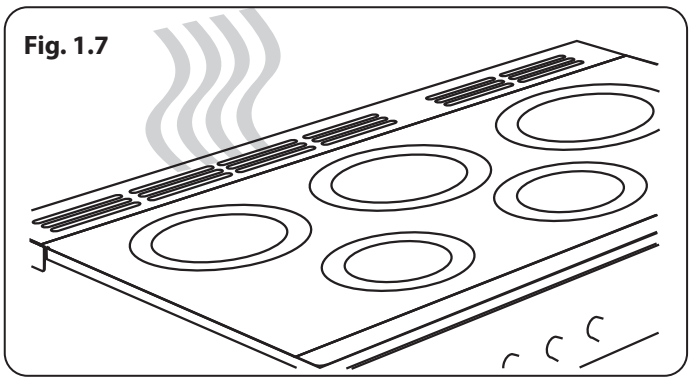

Hob care

- **NEVER** allow anyone to climb or stand on the hob.
- **DO NOT** use the hob surface as a cutting board.
- **DO NOT** leave utensils, foodstuffs or combustible items on the hob when it is not in use (e.g. tea towels, frying pans containing oil).
- **DO NOT** place plastic or aluminium foil, or plastic containers on the hob.
- Always turn the control to the **OFF** position before removing a pan.
- Avoid heating an empty pan. Doing so may damage both the hob and pan.

Cooling fan

This appliance may have a cooling fan. When the grill or oven is in operation the fan will run to cool the fascia and control knobs.

Cooker care

- As steam can condense to water droplets on the cool outer trim of the oven, it may be necessary during cooking to wipe away any moisture with a soft cloth. This will also help to prevent soiling and discolouration of the oven exterior by cooking vapours (**Fig. 1.7**).

Cleaning

- Isolate the electricity supply before carrying out any thorough cleaning. Allow the cooker to cool.
- In the interests of hygiene and safety, the cooker should be kept clean at all times as a build up in fats and other food stuff could result in a fire.
- Clean only the parts listed in this guide.
- Clean with caution. If a wet sponge or cloth is used to wipe spills on a hot surface, be careful to avoid steam burns. Some cleaners can produce noxious fumes if applied to a hot surface.
- **NEVER** use paint solvents, washing soda, caustic cleaners, biological powders, bleach, chlorine based bleach cleaners, coarse abrasives or salt.
- **DO NOT** mix different cleaning products – they may react together with hazardous results.
- All parts of the cooker can be cleaned with hot soapy water.
- Take care that no water seeps into the appliance.
- Before you remove any of the grill parts for cleaning, make sure that they are cool or use oven gloves.
- **DO NOT** use any abrasive substances on the grill and grill parts.
- **DO NOT** put the side runners in a dishwasher.
- **DO NOT** put the burner heads in a dishwasher.
- **NEVER** use caustic or abrasive cleaners as these will damage the surface.
- **DO NOT** use steel wool, oven cleaning pads or any other materials that will scratch the surface.
- **NEVER** store flammable materials in the drawer. This includes paper, plastic and cloth items, such as cookbooks, plastic ware and towels, as well as flammable liquids.
- **DO NOT** store explosives, such as aerosol cans, on or near the appliance.
- **DO NOT** use steel wool, oven cleaning pads, or any other materials that will scratch the surface.
- **DO NOT** attempt to disassemble or clean around any burner while another burner is on, otherwise an electric shock could result.

2. Overview

Fig. 2.1

Fig. 2.2

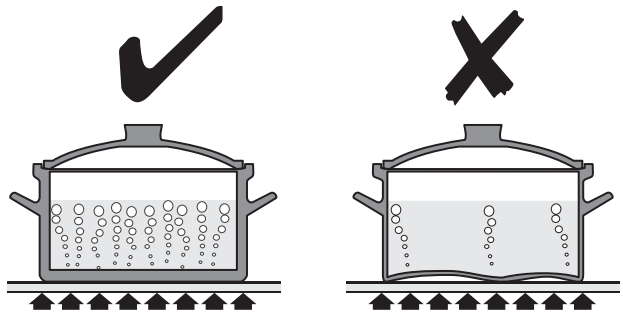

The induction cooker (**Fig. 2.1**) has the following features:

A. 5 induction cooking zones

B. A control panel

C. A multi-function oven

D. A storage drawer

The Hob

Use only pans that are suitable for induction hobs. We recommend stainless steel, enamelled steel pans or cast iron pans with enamelled bases. Note that some stainless steel pans are not suitable for use with an induction hob so please check carefully before purchasing any cookware.

Pans made of copper, aluminium or ceramic are not suitable for use on an induction hob. The kind of pan you use and the quantity of food affects the setting required. Higher settings are required for larger quantities of food.

Pots and pans should have thick, smooth, flat bottoms (**Fig. 2.2**). This allows the maximum heat transfer from the hob to the pan, making cooking quick and energy efficient. Never use a round-bottomed wok, even with a stand.

The very best pans have bases that are very slightly curved up when cold (**Fig. 2.3**). If you hold a ruler across the bottom you will see a small gap in the middle. When they heat up the metal expands and lies flat on the cooking surface.

Make sure that the base of the pan is clean and dry to prevent any residue burning onto the hob panel. This also helps prevent scratches and deposits.

Always use pans that are the same size as (or slightly larger than) the areas marked on the hob. Using a lid will help the contents boil more quickly.

Take care when placing hot lids onto the hob surface. Lids that have been covering boiling or steaming foods can 'stick' to the ceramic glass. Should this occur, DO NOT attempt to lift the lid off the hotplate: this may damage the hob surface. Instead, slide the lid to the edge of the hob surface and remove.

Always take care before touching the surface, even when the hob is turned off. It may be hotter than you think!

The induction hob comprises of five cooking zones containing induction elements with different ratings and diameters (**Fig. 2.4**) each with a pan detector and residual heat indicator, and a hob control display.

The hob control display (**Fig. 2.5**) informs you of the following induction hob functions:

- Pan detector
- Residual heat indicator
- Automatic heat-up
- Child lock
- L1/L2 Low temperature setting
- P Power boost setting

Pan Detector,

IMPORTANT: After use, switch off the hob element by its control and DO NOT RELY on the pan detector.

If a cooking area is switched on and there is no pan in place or if the pan is too small for the cooking area, then no heat will be generated. The symbol [] will appear on the hob control display; this is the "pan-missing symbol". Place a pan of the correct size on the cooking area and the [] symbol will disappear and cooking can begin. After 10 minutes without detecting a pan the cooking zone will switch off automatically.

Table 2.1 shows the minimum pan sizes recommended for each cooking zone.

NOTE: Using pans with a base diameter smaller than those recommended will result in a power reduction.

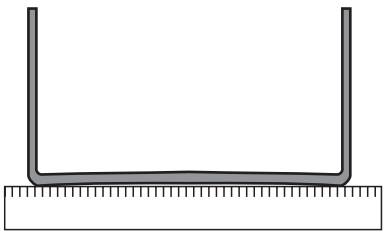

Fig. 2.3

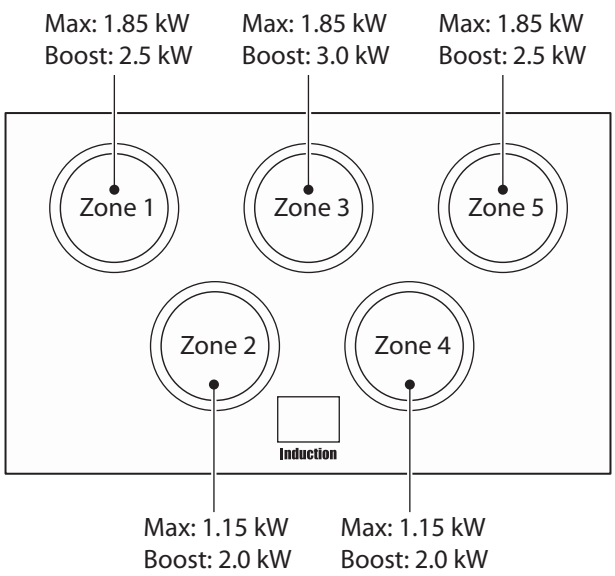

Fig. 2.4

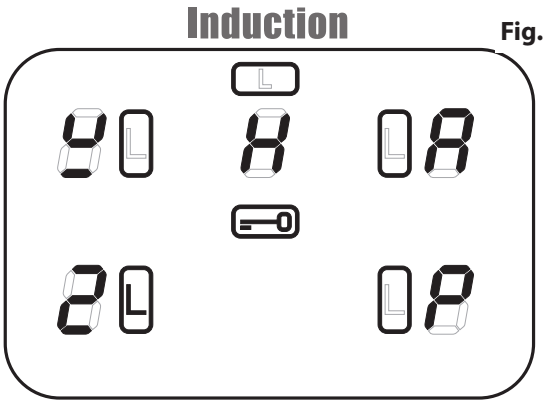

Fig. 2.5

Cooking Zone	Minimum Pan Diameter (Pan Base) mm
Front left	*120*
Rear left	*140*
Centre	*180*
Rear right	*140*
Front right	*140*

Table 2.1

Power level	Automatic heat-up time at 100% (min:sec)
1	0:48
2	2:24
3	3:50
4	5:12
5	6:48
6	2:00
7	2:48
8	3:36
9	

Table 2.2

Fig. 2.6

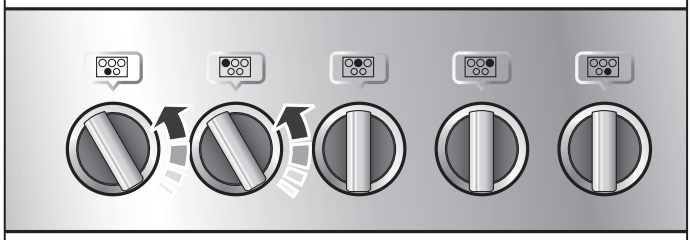

Fig. 2.7

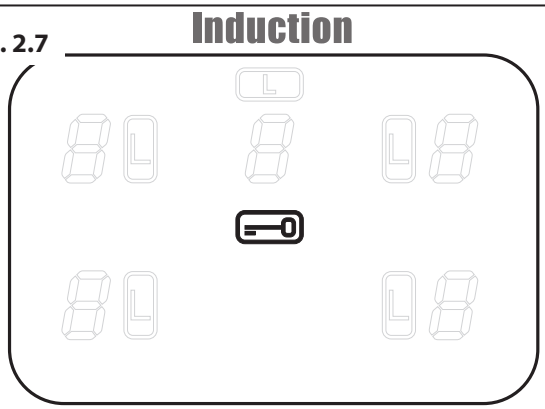

Residual Heat Indicator, H

After use, a cooking zone will remain hot for a while as heat dissipates. When a cooking zone is switched off the residual heat indicator symbol [H], will appear in the display. This shows that the cooking zone temperature is above 60 °C and may still cause burns. Once the temperature has dropped to below 60 °C the [H] will go out.

Automatic Heat-up, A

This function is available on all of the cooking zones. It allows rapid heating up of the element to bring the selected cooking zone up to temperature. Once the zone is at the required cooking temperature the power level will reduce automatically to the preset level.

The function is selected by turning the control knob to the 'A' position. This can be selected by turning the control knob momentarily counter-clockwise from the zero position until the symbol [A] is shown on the hob control display.

Once the [A] is displayed, turn the control knob to the level of your choice (1 to 9). The pan will heat up at 100% power for a specified time before the power is reduced to the level selected.

When the Automatic Heat-up function is activated, the hob control display will flash alternately between the [A] setting and the chosen power level.

Once the automatic heat-up time has ended the hob display will stop flashing and will show the chosen power level.

The Automatic Heat-up function can be stopped by either turning the control knob back to the "0" power setting or turning the control knob to the "9" power setting.

For your guidance **Table 2.2** shows the time available at 100% power depending on the power level selected in the Automatic Heat-up mode.

Child Lock, ⊟

To prevent the unwanted use by children, the hob can be locked.

⚠ **IMPORTANT: This can only be activated when all the cooking zones are switched off.**

To lock the hob, simultaneously turn the two left-hand controls counter-clockwise (**Fig. 2.6**) and hold until the ⊟ symbol appears in the centre of the hob control display (**Fig. 2.7**).

NOTE: [A] will flash when locking the hob – this is normal.

Locking the hob will **NOT** affect the oven; it can still be used.

To unlock the hob, simultaneously turn the two left-hand controls counter-clockwise and hold until the ⊟ symbol disappears from the centre of the hob control display.

Low Temperature Setting, L1/L2

Each cooking area is equipped with 2 low temperature settings:

- *L1* will maintain a temperature of about 40 °C – ideal for gently melting butter or chocolate.
- *L2* will maintain a temperature of about 90 °C – ideal for simmering (bring the pan to the boil and then select *L2* to keep soups, sauces, stews, etc at an optimal simmer).

The maximum time this setting can be used is 2 hours, after which the hob will switch off automatically. If required, you can immediately restart the Low Temperature function by reactivating *L1* or *L2*.

Power Boost Setting, P

All of the induction cooking zones have Power Boost available, activated by turning the control knob clockwise until [*P*] is shown on the hob control display.

Power Boost allows additional power to be made available for each of the cooking zones. This is useful to bring a large pan of water to the boil quickly.

The Power Boost function operates for a maximum of 10 minutes on each zone, after which the power is automatically reduced to setting 9.

When using the Power Boost function, the cooking zones are linked.

Fig. 2.8 shows the hob layout. Zones A and B are linked together as are zones C, D and E.

This means that when using zone A on Power Boost and then switching zone B to power boost, then the power to zone A will reduce slightly. The last zone switched to Power Boost always takes priority. Zones C, D and E work in the same way.

This is a built in safety device.

Deactivate the Power Boost function by turning the control knob to a lower setting.

Overheat Function

This function identifies when the temperature of the pan rises rapidly and works to maintain a safe level of pan temperature. It should not interfere with normal cooking.

Cookware with bases that become distorted (**Fig. 2.2**) when heated may interfere with the operation of the Overheat Function. This may result in damage to your cookware or Induction Glass Hob.

Please remember not to leave the hob unattended. Care should be taken to not allow your cookware to boil dry. Damage to your cookware and Induction Glass Hob may result.

Please read and follow the manufacturers' instructions carefully before using cookware on your induction hob.

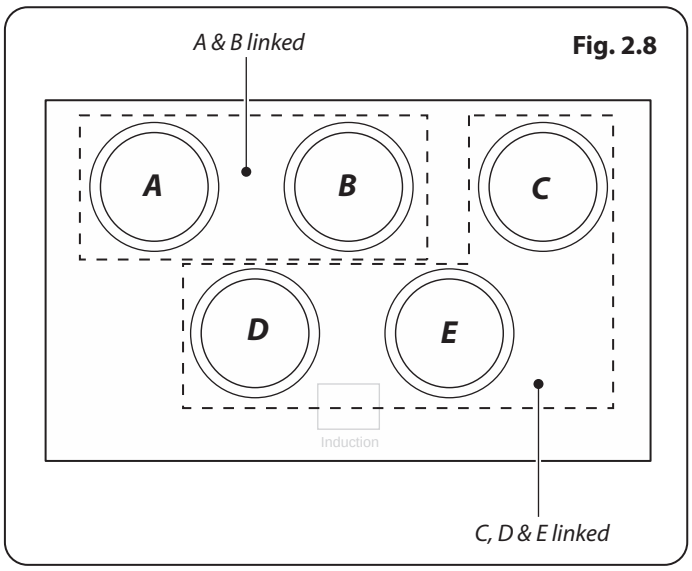

Fig. 2.8

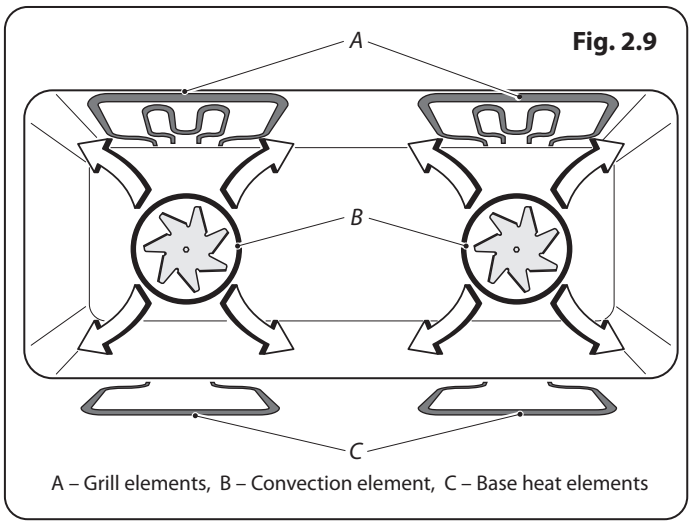

Fig. 2.9

A – Grill elements, B – Convection element, C – Base heat elements

Function	Use
Defrost	To thaw small items in the oven without heat
Fan oven	A full cooking function, even heat throughout, great for baking
Fanned grilling	Grilling meat and fish with the door closed
Fan assisted	A full cooking function good for roasting and baking
Conventional oven	A full cooking function for roasting and baking in the lower half of the oven
Browning element	To brown and crisp cheese topped dishes
Base heat	To crisp up the bases of quiche, pizza or pastry

Table 2.3

Fig. 2.10

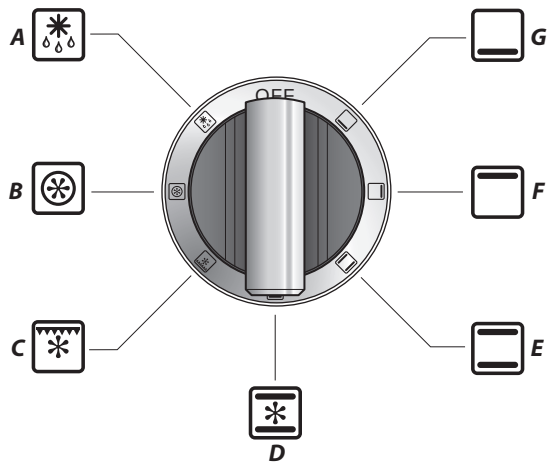

A – Defrost, B – Fan Oven, C – Fanned Grilling, D – Fan Assisted Oven, E – Conventional Oven, F – Browning Element, G – Base Heat

Multifunction Oven

The oven is a multi-function oven **(Fig. 2.9)**.As well as the oven fan and fan element, they are fitted with two extra heating elements, one visible in the top of the oven and the second under the oven base. Take care to avoid touching the top element and element deflector when placing or removing items from the ovens.

The multi-function oven has 3 main cooking functions: **fan**, **fan assisted** and **conventional cooking**. These functions should be used to complete most of your cooking.

The **browning element** and **base heat** can be used in the latter part of the cooking process to fine tune the results to your particular requirements.

Use **fanned grilling** for all your grilling needs and **defrost** to safely thaw small items of frozen food.

Table 2.3 gives a summary of the multi-function modes.

The multi-function oven has many varied uses. We suggest you keep a careful eye on your cooking until you are familiar with each function. Remember, not all functions will be suitable for all food types.

Multifunction Oven Modes (Fig. 2.10)

Defrost (A)

This function operates the fan(s) to circulate cold air only. Make sure the temperature control is at 0°C and that no heat is applied. This enables small items such as desserts, cream cakes and pieces of meat, fish and poultry to be defrosted.

Defrosting in this way speeds up the process and protects the food from contamination. Pieces of meat, fish and poultry should be placed on a shelf, over a tray to catch any drips. Be sure to wash the shelf and tray after defrosting.

Defrost with the oven door closed. Defrosting should not be carried out in a warm oven. Large items, such as whole chickens and meat roasts should not be defrosted in this way. We recommend this be carried out in a refrigerator.

Make sure that dairy foods, meat and poultry are completely defrosted before cooking.

Fan Oven (B)

This function operates the fans and the heating element around them. An even heat is produced throughout the oven, allowing you to cook large amounts quickly.

Fan oven cooking is particularly suitable for multi-shelf cooking and is a good 'all-round' function. It may be necessary to reduce the temperature by approximately 10 °C for recipes previously cooked in a conventional oven.

If you wish to preheat the oven, wait until the indicator light has gone out before inserting the food.

Fanned Grilling (C)

This function operates the fan while the top element is on. It produces a more even, less fierce heat than a conventional grill. For best results place the food to be grilled on the pan provided. Thick pieces of meat or fish are ideal for cooking in this way, as the circulated air reduces the fierceness of the heat from the grill. The oven door should be kept closed while cooking is in progress, so saving energy. You will also find that the food needs to be watched and turned less than for normal grilling. Preheat this function before cooking.

NOTE: When grilling full width, to allow sufficient access for tending foods we recommend placing the grill pan tray support on the second from top level.

Fan Assisted Oven (D)

This function operates the fans, circulating air heated by the elements at the top and the base of the oven. The combination of fan and conventional cooking (top and base heat) makes this function ideal for cooking large items that need thorough cooking, such as a large meat roast. It is also possible to bake on two shelfs at one time, although they will need to be changed over during the cooking time, as the heat at the top of the oven is greater than at the base, when using this function.

This is a fast intensive form of cooking; keep an eye on the food cooking until you are familiar with this function.

Conventional Oven (E) *(Top and Base Heat)*

This function combines the heat from the top and base elements. It is particularly suitable for roasting and baking pastry, cakes and biscuits.

Food cooked on the top shelf will brown and crisp faster than on the lower shelf, because the heat is greater at the top of the oven than at the base, as in 'Fan assisted oven' function. Similar items being cooked will need to be swapped around for even cooking. This means that foods requiring different temperatures can be cooked together, using the cooler zone in the lower half of the oven and hotter area to the top.

The exposed top element may cook some foods too quickly, so we recommend that the food be positioned in the lower half of the oven to cook. The oven temperature may also need to be lowered.

Browning Element (F)

This function uses the element in the top of the oven only. It is a useful function for the browning or finishing of pasta dishes, vegetables in sauce and lasagne, the item to be browned being already hot before switching to the top element.

Base Heat (G)

This function uses the base element only. It will crisp up your pizza or quiche base or finish off cooking the base of a pastry case on a lower shelf. It is also a gentle heat, good for slow cooking of casseroles in the middle of the oven or for plate warming.

⚠ WARNING! ⚠

Take great care when removing the divider not to scratch the inner glass door surface. Scratches in the glass can cause stress and may cause the door to fail.

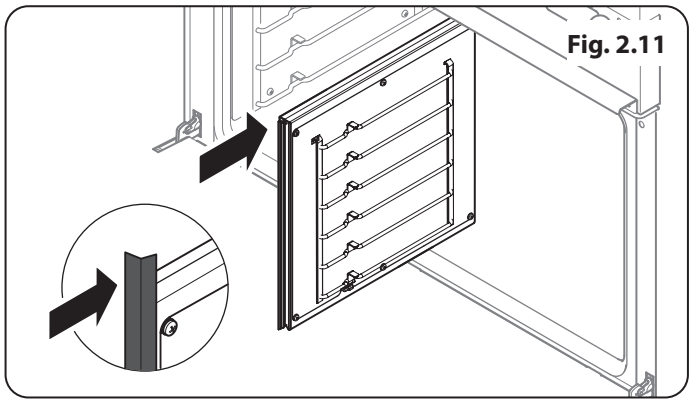
Fig. 2.11

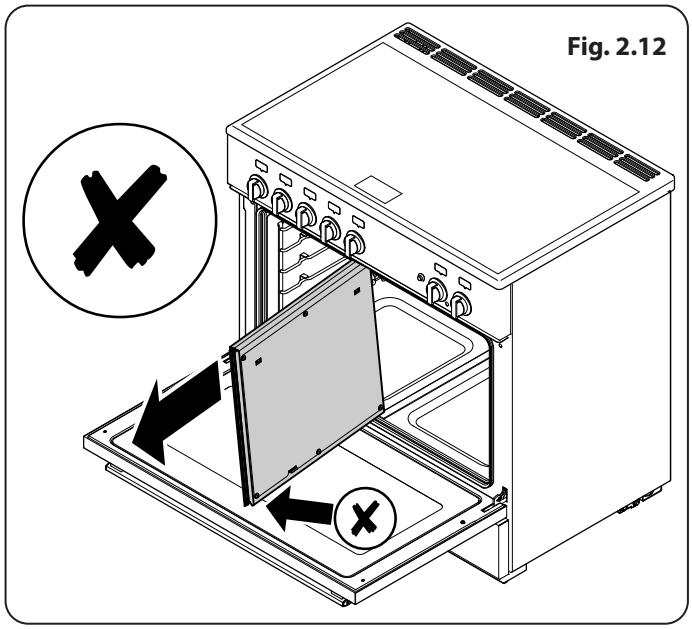
Fig. 2.12

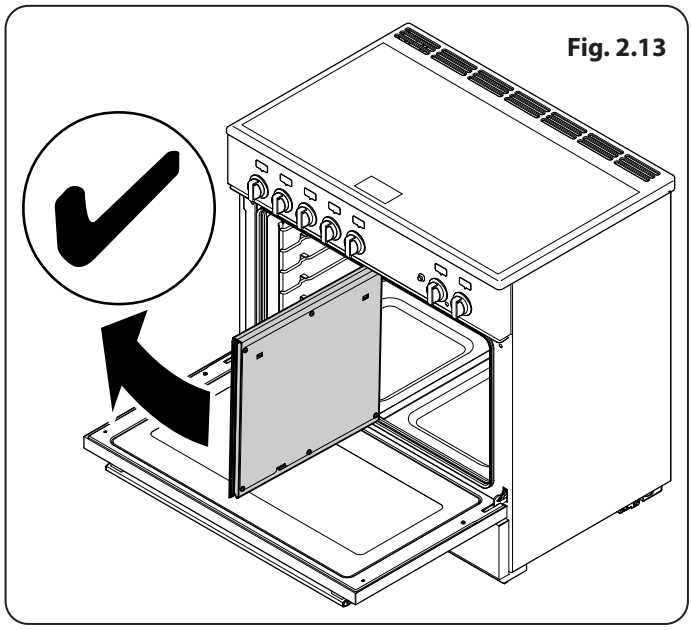
Fig. 2.13

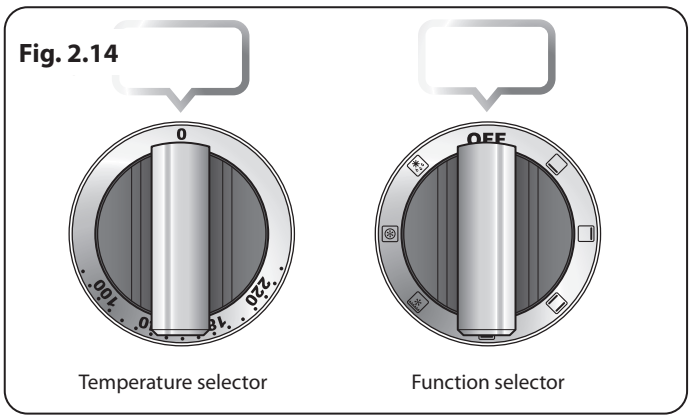

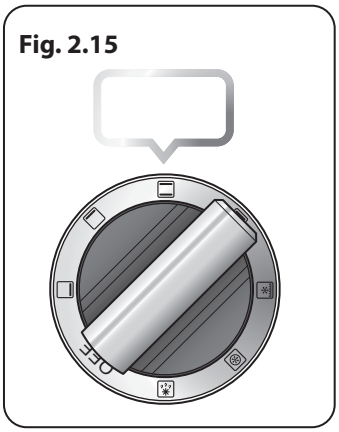

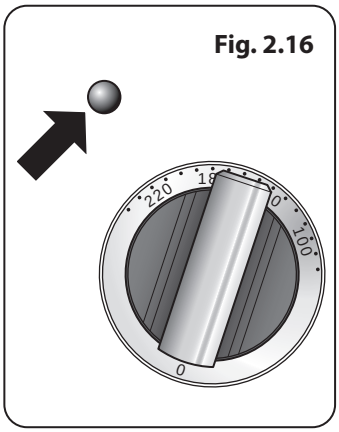

The Browning and Base Heat functions are useful additions to your oven, giving you flexibility to finish off items to perfection. With use, you will soon realise how these functions can combine to extend your cooking skills.

Energy Saving Panel

The oven has a divider feature (**Fig. 2.11**). With this in place only one half of the oven is heated and only the right-hand side elements are used. This saves energy and is ideal for cooking most foods. When using the divider, condensation may appear in the left-hand oven – this is normal.

For very large loads, or large dishes for special occasions then the divider can be removed. This brings into use the elements on the left-hand side as well as those on the right when a function is selected.

All oven functions are available in full and divided forms and shelves are provided for use in both forms.

WARNING! Take great care when removing the divider not to scratch the inner glass door surface. Scratches in the glass can cause stress and may cause the door to fail.

Removing the Divider

Make sure the cooker is cool before attempting to remove the divider.

Fully open the door and remove the oven shelves. When removing the divider, tilt it slightly upwards and grip the underside to prevent the metal base making contact with the door glass (**Fig. 2.12** and **Fig. 2.13**).

NOTE: We recommend that you place a tea towel or similar on the door glass before removing the divider. This should prevent the door inner from scratching.

DO NOT place or slide metallic objects, including cookware, on the door glass as this may cause scratching and subsequent failure to occur.

Operating the Oven

The multi-function oven has two controls: a function selector and a temperature setting knob (**Fig. 2.14**).

Turn the function selector control to a cooking function. **Fig. 2.15** shows the control set for convectional oven cooking.

Turn the oven temperature knob to the temperature you need. The oven heating light will glow until the oven has reached the temperature you selected. It will then cycle on and off during cooking as the oven maintains the selected temperature (**Fig. 2.16**).

Accessories

Oven Shelves

Each oven is supplied with:

- Two full capacity shelves (**Fig. 2.17**)
- Grill pan tray support (**Fig. 2.18**)
- Two grill pans with trivets (**Fig. 2.19**)
- Three energy saving shelves (**Fig. 2.20**)
- Four ladder shelf supports (**Fig. 2.21**)
- And one divider (**Fig. 2.22**)

Any shelf can be fitted in any of the positions. The oven shelves are retained when pulled forward but can be easily removed and refitted.

To Remove and Refit the Ladder Shelf Supports

Lift the ladder support hooks out of the two locating holes in the oven side (or divider) before lifting the support clear of the bottom ladder restraint.

Refit by inserting the bottom of the ladder into the restraint before fitting the hooks through the locating holes.

To Remove and Refit the Shelves

Pull the shelf forwards until the back of the shelf is stopped by the shelf support (**Fig. 2.23**). Lift up the front of the shelf so the back of the shelf will pass between the supports and then pull the shelf forward (**Fig. 2.24**).

Refit in the reverse order, making sure to push it fully back.

Oven Light

Press the button to turn on the oven lights.

If one of the oven lights fail, turn off the range circuit breaker before you change the bulb. See the 'Troubleshooting' section for details on how to change an oven light bulb (**Fig. 2.25**).

Storage

The bottom drawer is for storing oven trays and other cooking utensils. The drawer can be removed completely for cleaning, etc.

⚠ **It can get very warm, so do not store anything in it that may melt or catch fire.**

⚠ **NEVER store flammable materials in the drawer. This includes paper, plastic and cloth items, such as cookbooks, plastic ware and towels, as well as flammable liquids.**

⚠ **DO NOT store explosives, such as aerosol cans, on or near the appliance.**

⚠ **Flammable materials may explode and result in fire or property damage.**

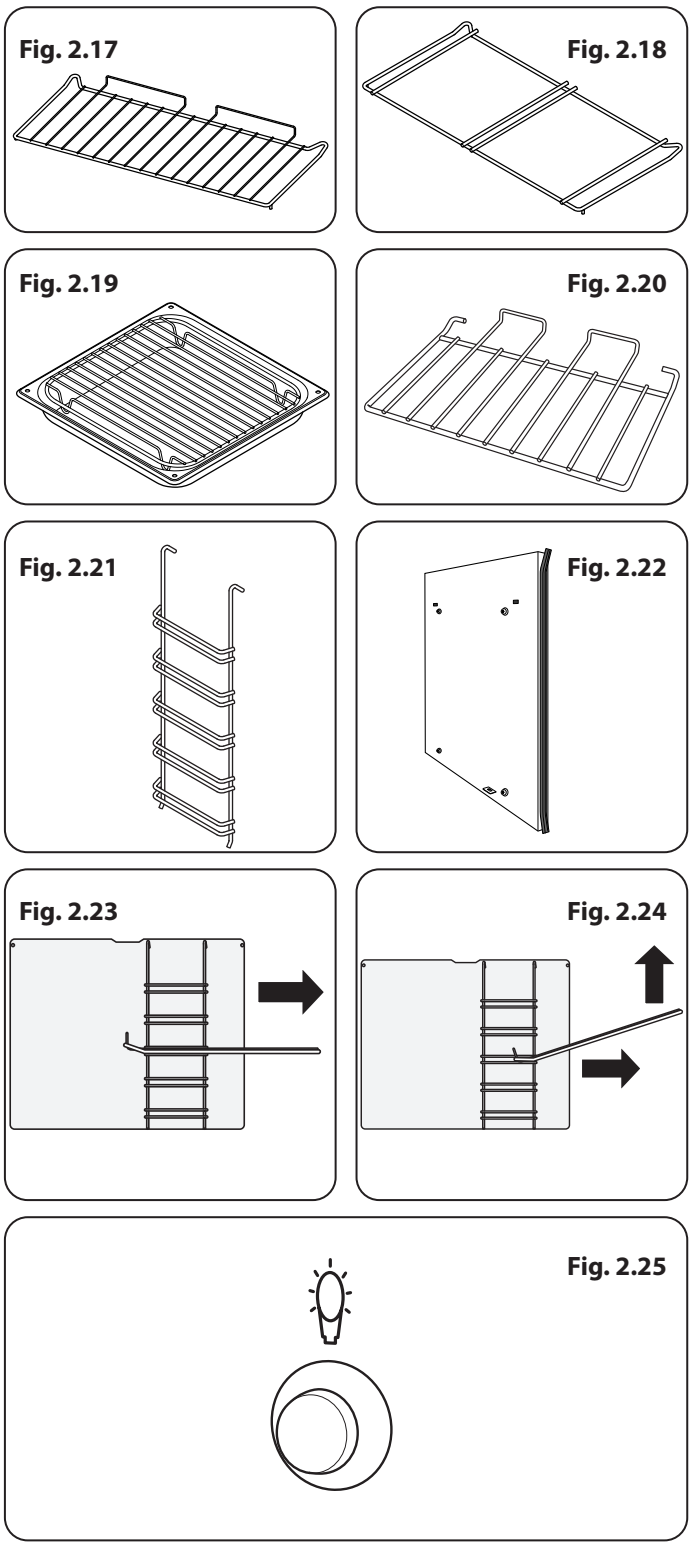

3. Rotary clock

Symbol key

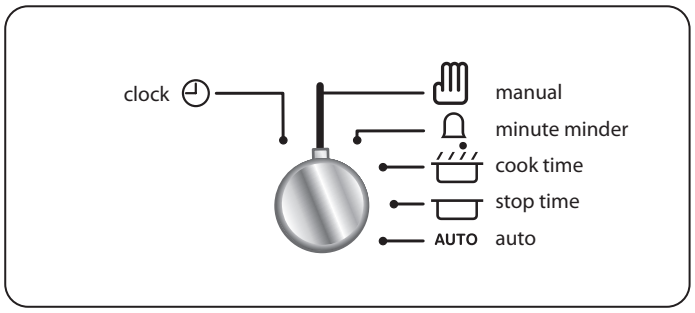

Setting the time

The clock must be set to the time of day before the oven will work

Step. 1

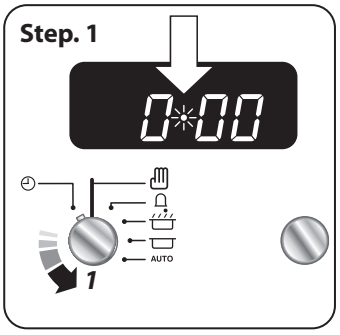

Step. 2
Centre dot will stop flashing after 3 seconds.

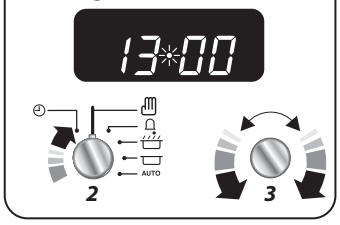

Minute Minder

Step. 1 Setting the minute minder

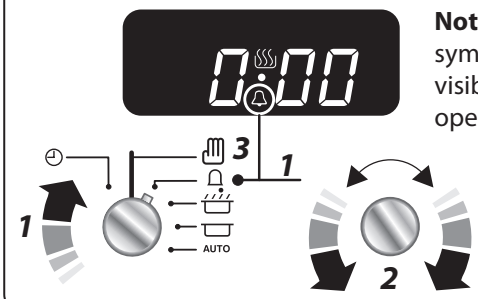

Note: The cook symbol [♨] remains visible during normal operation.

Step. 2 Cancel the timer alarm

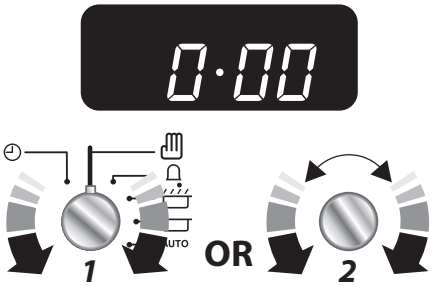

NOTE

If the alarm is not manually switched off it will stop after approximately 2 minutes.

When the Minute Minder is active the clock will not dim between the hours of 10 pm and 6 am

To stop the oven at a specific time of day

(main oven only)

You have set the required temperature and function mode and you would like the oven to automatically stop.

Step. 1

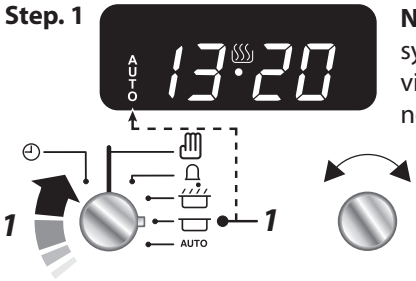

Note: The cook symbol [♨] remains visible during normal operation.

Step. 2

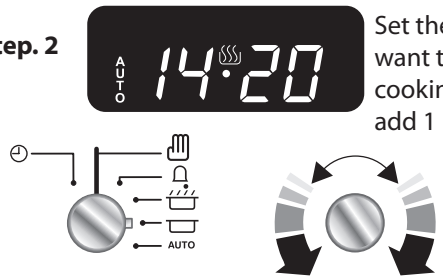

Set the time of day you want the oven to stop cooking, for example add 1 hour.

Step. 3

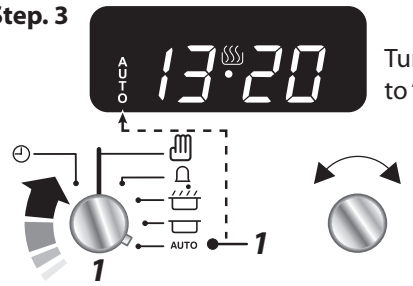

Turn the knob **(1)** to 'AUTO'

Check how much time you have left

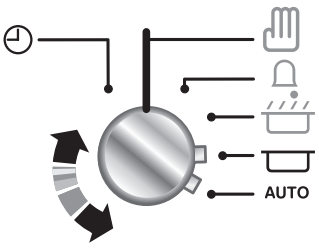

Switch between these two.

Step. 4 Alarm will sound when cooking has finished, to cancel follow this step

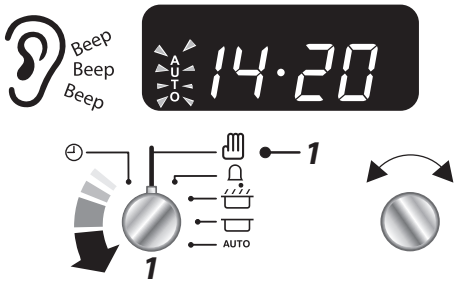

⚠ **REMEMBER** Turn the oven control knob (s) to 0.

To start and stop the oven automatically *(main oven only)*

The timer allows you to automatically start and stop by a combination of the length of the cooking time and the stop time. Giving you the flexibility to cook casseroles etc while you are out. You cannot set the actual start time.

Step. 1 Set the cook time

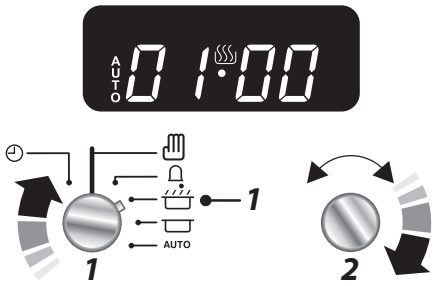

Step. 2

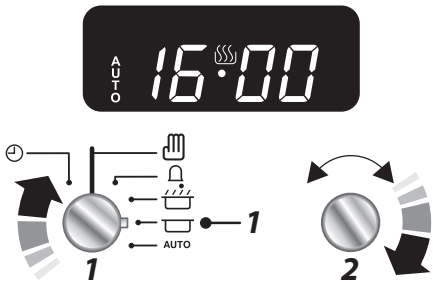

1. The display will show the current time of day plus the 'cook time' you just set.
2. Turn knob **(2)** to set the time of day you want the oven to stop cooking

Step. 3 Current time will be displayed along with the word 'AUTO'. Set the oven to the required cooking temperature and function.

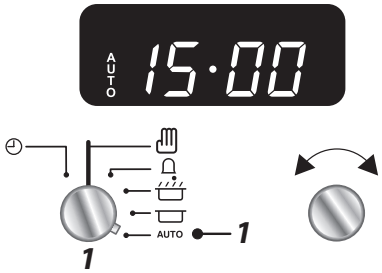

In this example the oven will come on automatically at 16.00 and switch off at 17.00.

Note: The cook symbol [♨] will be visible once in operation.

Check how much time you have left

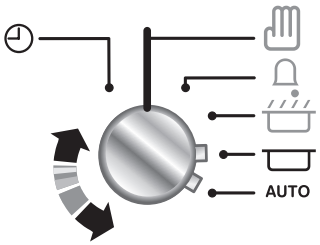

Switch between these two.

Step. 4. Alarm will sound when cooking has finished, to cancel follow this step

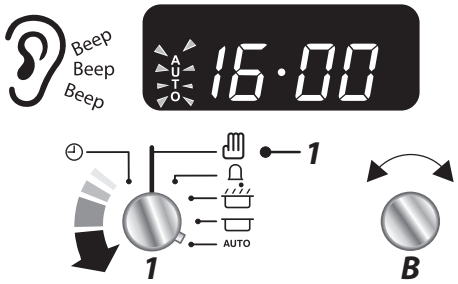

⚠ **REMEMBER** Turn the oven control knob(s) to 0.

To cancel any automatic settings

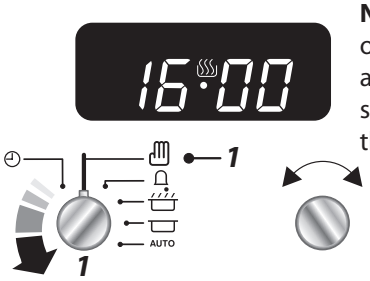

Note: Whilst this operation cancels all automatic program settings, it does not cancel the minute minder.

Beeper tone adjustment

Step. 1

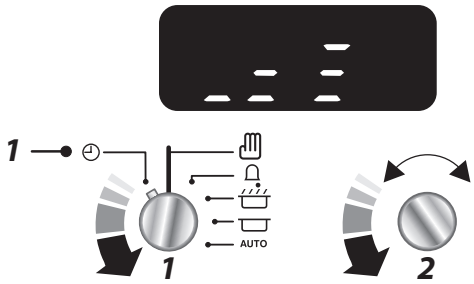

Step. 2

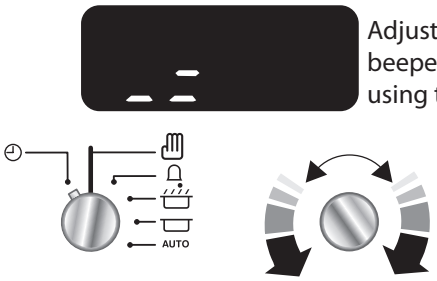

Adjust the beeper tone using this knob.

4. Cooking tips

Cooking with a multifunction oven

Remember: not all modes are suitable for all food types. The oven cooking times given are intended for a guide only.

Tips on cooking with the timer

If you want to cook more than one dish, choose dishes that require approximately the same cooking time. However, dishes can be 'slowed down' slightly by using small containers and covering them with aluminium foil, or 'speeded up' slightly by cooking smaller quantities or placing them in larger containers.

Very perishable foods such as pork or fish should be avoided if a long delay period is planned, especially in hot weather.

⚠ **DO NOT place warm food in the oven to be timed.**

⚠ **DO NOT use a timed oven that is already warm.**

Whole poultry must be thoroughly defrosted before being placed in the oven. Check that meat and poultry are fully cooked before serving.

General oven tips

The wire shelves should always be pushed firmly to the back of the oven.

Baking trays with food cooking on them should be placed level with the front edge of the oven's wire shelves. Other containers should be placed centrally. Keep all trays and containers away from the back of the oven, as overbrowning of the food may occur.

When the oven is on, do not leave the door open for longer than necessary, otherwise the knobs may get very hot.

- Always leave a "finger's width" between dishes on the same shelf. This allows the heat to circulate freely around them.
- To reduce fat splashing when you add vegetables to hot fat around a roast, dry them thoroughly or brush lightly with cooking oil.
- Where dishes may boil and spill over during cooking, place them on a baking tray.
- Sufficient heat rises out of the right-hand oven while cooking to warm plates in the left-hand oven.
- If you want to brown the base of a pastry dish, preheat the baking tray for 15 minutes before placing the dish in the centre of the tray.

5. Cleaning your cooker

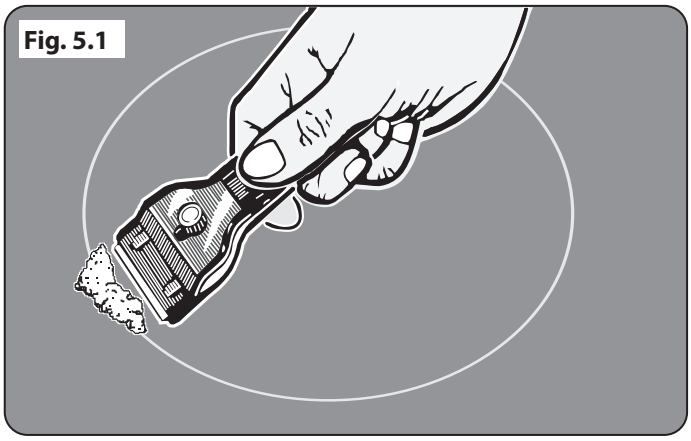
Fig. 5.1

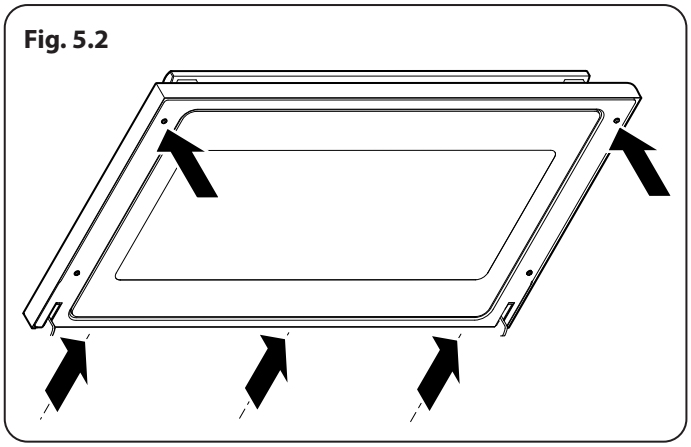
Fig. 5.2

Isolate the electricity supply before carrying out any major cleaning. Allow the cooker to cool.

NEVER use paint solvents, washing soda, caustic cleaners, biological powders, bleach, chlorine based bleach cleaners, coarse abrasives or salt.

DO NOT mix different cleaning products – they may react together with hazardous results.

All parts of the cooker can be cleaned with hot soapy water – **but take care that no surplus water seeps into the appliance**. Remember to switch the electricity supply back on and reset the clock before reusing the cooker.

Hob

Daily care

First of all make sure that all heat indicator lights are off and that the cooking surface is cool. Apply a small dab of ceramic cleaning cream in the centre of each area to be cleaned. Dampen a clean paper towel and work the cream onto the cooking surface. As a final step, wipe the cooking surface with a clean, dry paper towel.

Cleaning spills

For spills and boil-overs that occur while cooking, turn the unit off and wipe the area surrounding the hot zone with a clean paper towel. If a spill (other than a sugary substance) is on the hot zone, do not clean until the unit has completely cooled down, and then follow the instructions below ('Cleaning Burned-on Spills').

If you accidentally melt anything on the surface, or if you spill foods with a high sugar content (preserves, tomato sauce, fruit juice, etc.), remove the spill IMMEDIATELY with a razor scraper, while the unit is still hot.

IMPORTANT: Use an oven glove to protect your hand from potential burns.

Scrape the major spill or melted material from the cooking zone and push into a cold area. Then, turn the unit 'OFF' and allow it to cool before cleaning further. After the cooking surface cools down and the heat indicator lights go off, follow the 'Daily Care' procedure outlined above.

Cleaning burned-on spills

Make sure that the heat indicator lights are off and that the hob is cool. Remove the excess burned-on substance with a single-edged razor scraper. Hold the scraper at an angle of about 30° to the surface and then scrape off the burned-on matter (**Fig. 5.1**).

Oven and divider

Clean the oven and divider with a proprietary oven cleaner, suitable for enamel.

IMPORTANT: Before cleaning the divider make sure to remove the silicon sealing strip from the front

edge – some oven cleaners can damage the seal. Remove the strip by gently pulling both ends to release the hooks holding it in place.

Control panel and oven doors

Avoid using any abrasive cleaners including cream cleaners. For best results use liquid detergents. The control panel and control knobs should only be cleaned using a soft cloth wrung out in clean hot soapy water – but take care that no surplus water seeps into the appliance. Wipe with a clean dampened cloth then polish with a dry cloth. The oven doors should only be cleaned with a soft cloth wrung out in clean hot soapy water.

Removing the oven door outer panel

The outer door panel can be removed so that the inside of the glass can be cleaned. Open the door and remove the 2 screws in the inside face (**Fig. 5.2**). With the door closed, remove the 3 screws in the underside of the door. Using the handle, carefully lift the door away. Refit in reverse.

Cleaning Table

Cleaners listed (**Table 5.1**) are available from supermarkets or electrical retailers as stated.

For enamelled surfaces use a cleaner that is approved for use on vitreous enamel.

Regular cleaning is recommended. For easier cleaning, wipe up any spillages immediately.

Hotplate		
Part	**Finish**	**Recommended Cleaning Method**
Hob top	Enamel or stainless steel	Hot soapy water, soft cloth. Any stubborn stains remove gently with a nylon scourer.
Ceramic/Induction hob	Toughened glass	Hot soapy water; cream cleaner/scourer if necessary.
Griddle plate (some models only)	Non-stick surface	Allow to cool. Wash in hot soapy water. Do not use abrasive cleaners/ scourers. Dishwasher.
Warming zone (some models only)	Toughened glass	Hot soapy water, cream cleaner/scourer if necessary.
Outside of Cooker		
Part	**Finish**	**Recommended Cleaning Method**
Door, door surround and storage drawer exterior	Enamel or paint	Hot soapy water, soft cloth. Any stubborn stains, remove gently with a liquid detergent.
	Stainless steel	E-cloth (electrical retailers) or microfibre all-purpose cloth (supermarket).
Sides and plinth	Painted surface	Hot soapy water, soft cloth.
Splashback/rear grille	Enamel or stainless steel	Hot soapy water, soft cloth. Cream cleaner, with care, if necessary.
Control panel	Paint, enamel or stainless steel	Warm soapy water. Do not use abrasive cleaners on lettering.
Control knobs/handles & trims	Plastic/chrome, copper or lacquered brass	Warm soapy water, soft cloth.
	Brass	Brass polish.
Oven door glass/glass lid (some models only)	Toughened glass	Hot soapy water, cream cleaner/scourer if necessary.
Oven and Grill		
Part	**Finish**	**Recommended Cleaning Method**
Sides, floor & roof of oven NOT COOK & CLEAN OVEN PANELS (see below)	Enamel	Any proprietary oven cleaner that is suitable for enamel. CAUTION: CORROSIVE/CAUSTIC OVEN CLEANERS: FOLLOW MANUFACTURER'S INSTRUCTIONS. Do not allow contact with the oven elements.
Cook & Clean oven panels (some models only)	Special enamel that partly cleans itself	This surface cleans itself at 200 °C and above, or the panels can be removed and washed with hot soapy water and a nylon brush.
Oven shelves, Handyrack, grill trivet, Handygrill rack (some models only)	Chrome	An oven interior cleaner that is suitable for chrome. Soap filled pad. Dishwasher.
Grill pan/meat tin (some models only)	Enamel	Hot soapy water. Soap filled pad. Dishwasher.

Table 5.1

6. Troubleshooting

⚠ **Interference with and repairs to the hob MUST NOT be carried out by unqualified persons. Do not try to repair the hob as this may result in injury and damage to the hob. Please arrange for repair by a suitably competent person.**

Note: The induction hob is able to self-diagnose a number of problems and can show this information to the user via the hob control display. Error codes may be displayed if your hob has developed a fault.

If your appliance reports an error or is not working, you may be able to correct the fault by consulting the following.

Error code E2 is displayed

The electronic unit is too hot. Please check the installation of the cooker, making sure that there is sufficient ventilation. In extreme cases, if a cooking utensil has been allowed to boil dry this error code may also be displayed. If in doubt please contact your installer or a qualified repair engineer.

No display operation

Over voltage or loss of supply voltage to the cooker. If in doubt please contact your installer or a qualified repair engineer.

Error code U400 is displayed

The cooker has been incorrectly connected. The control will switch off after approximately 1 second and the error code will be permanently displayed.

Consult your installer or a qualified repair engineer.

Error code Er followed by a number is displayed

The appliance has developed an internal technical fault that cannot be rectified by the user.

Consult your installer or a qualified repair engineer.

The fuse blows or the RCD trips regularly

Please contact your installer or a qualified repair engineer.

The cooker will not switch on

Has the wiring system in the house blown a fuse or tripped an RCD?

Has the cooker been correctly connected to the mains supply?

Has the child lock been activated? Please refer to the child lock section for details of this function.

The induction hob is noisy

When using the induction hob there may be some 'noise' emitted from the pan. This is normal and may be most noticeable when cooking on high power settings or if 5 pans are used simultaneously. The type of pan may also contribute to induction 'noise'.

The cooling fan

The induction hob incorporates a cooling fan. This cooling fan is active when either the grill or the oven(s) are on. Under certain conditions, the cooling fan may remain active when the grill or oven(s) are switched off. This is normal and the fan will switch off automatically.

The fascia gets hot when I use the oven

If the fascia becomes excessively hot when the cooker is in use then the cooling fan may have failed. Should this occur please contact your installer, a qualified repair engineer or Customer Service to arrange for its repair.

A crack has appeared in the hob surface

Disconnect the cooker immediately from the power supply and arrange for its repair. Do not use the cooker until after the repair.

My hob is scratched

Always use the cleaning methods recommended in this guide, and make sure that the pan bottoms are smooth and clean.

Marks from mineral deposits from water or food can be removed with a cleaning cream. However, tiny scratches are not removable but will become less visible in time as a result of cleaning.

The oven fan is noisy

The note of the oven fan may change as the oven heats up – this is perfectly normal.

The knobs get hot when I use the oven . Can I avoid this?

Yes, this is caused by heat rising from the oven and heating them up. Do not leave the oven door open. **Do not leave the oven door open**.

If there is an installation problem and I don't get my original installer to come back to fix it, who pays?

You do. Service organisations will charge for their call-outs if they are correcting work carried out by your original installer. Therefore, it's in your own interest to keep track of this installer so that you can contact them as required.

Food is cooking too slowly, too quickly, or burning

Cooking times may differ from your previous oven. Check that you are using the recommended temperatures and shelf positions – see the oven cooking guide. Then adjust the settings according to your own individual tastes.

The oven light is not working

The bulb has probably blown. You can buy a replacement bulb (which is not covered under the guarantee) from most electrical stores. Ask for a 40 W – 230 V halogen lamp (G9) (**Fig. 6.1**).

Before removing the existing bulb, turn off the power supply and make sure that the oven is cool. Open the oven door and remove the oven shelves.

Locate the bulb cover and unscrew it by turning it counter-clockwise – it may be very stiff (**Fig. 6.2**).

Pull the existing bulb to remove it. When handling the replacement bulb, avoid touching the glass with your fingers, as oils from your hands can cause premature failure. Push, click in the replacement bulb.

Replace the bulb cover by turning it a quarter turn, clockwise. Turn on the circuit breaker and check that the bulb now lights.

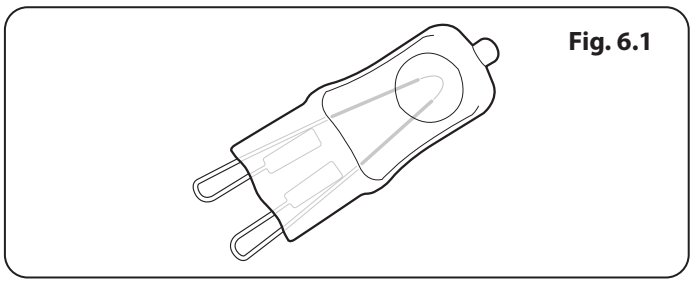

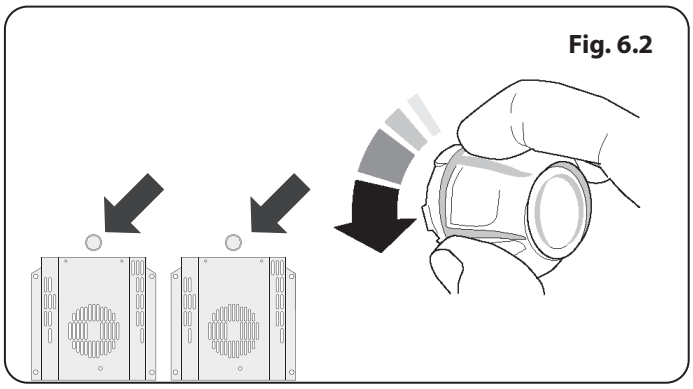

The oven is not cooking evenly

Do not use a baking tray with dimensions larger than those specified in the section on 'General Oven Tips'.

If you are cooking a large item, be prepared to turn it round during cooking.

If two shelves are used, check that space has been left for the heat to circulate. When a baking tray is put into the oven, make sure that it is placed centrally on the shelf.

Check that the door seal is not damaged and that the door catch is adjusted so that the door is held firmly against the seal.

A dish of water when placed on the shelf should be the same depth all over. (For example, if it is deeper at the back, then the back of the cooker should be raised up or the front lowered.) If the cooker is not level, arrange for your supplier to level it for you.

Oven temperature getting hotter as the cooker gets older

If turning the temperature down using the oven control knob has not worked, or has only worked for a short time, then you may need a new thermostat. This should be fitted by a service person.

7. Installation

Dear Installer

Before you start your installation, please complete the details below, so that, if your customer has a problem relating to your installation, they will be able to contact you easily.

Installer's Name
Installer's Company
Installer's Telephone Number
Appliance Serial Number

Safety requirements and regulations

You must be aware of the following safety requirements & regulations.

⚠ **This cooker must be installed in accordance with the relevant instructions in this booklet, with the relevant national and local regulations, and with the local electricity supply companies' requirements.**

⚠ **The appliance must be installed in accordance with the regulations in force and only in a well ventilated space.**

⚠ **Read the instructions before installing or using this appliance.**

Provision of ventilation

This appliance is not connected to a combustion products evacuation device. Therefore, particular attention must be given to the relevant requirements regarding ventilation.

All rooms require a window that can be opened, or equivalent, while some rooms require a permanent vent in addition to the window.

Location of cooker

The cooker may be installed in a kitchen/kitchen diner but **NOT** in a room containing a bath or shower.

This appliance is designed for domestic cooking only. Use for any other purpose could invalidate any warranty or liability claim.

You will need the following equipment to complete the cooker installation satisfactorily:

- Stability bracket may be installed. **This is not supplied with the cooker** but is available at most builders' merchants.
- Multimeter (for electrical checks).
- Allen keys (provided in pack).

You will also need the following tools:

1. Electric drill
2. Masonry drill bit (only required if fitting the cooker on a stone or concrete floor)
3. Wall plugs (only required if fitting the cooker on a stone or concrete floor)
4. Steel tape measure
5. Cross head screwdriver
6. Flat head screwdriver
7. 4 mm & 3 mm Allen keys
8. Spirit level
9. Pencil
10. Adjustable spanner
11. Screws for fitting stability bracket
12. 13 mm spanner or socket wrench

Checking the parts:

Full capacity shelf	Grill pan tray support
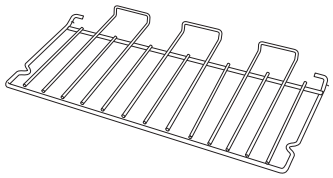	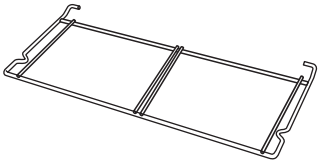
2 grill pans and trivets	2 energy saving shelves
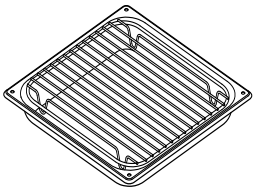	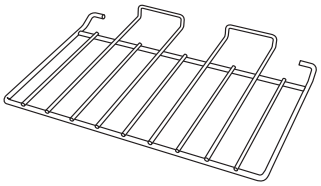
Divider	Plinth
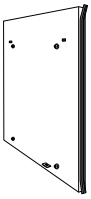	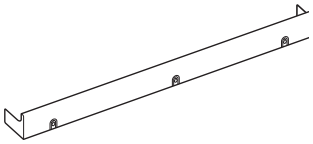

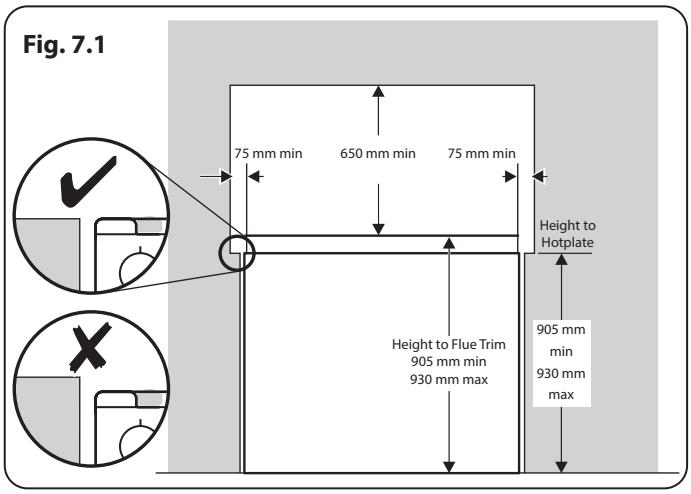

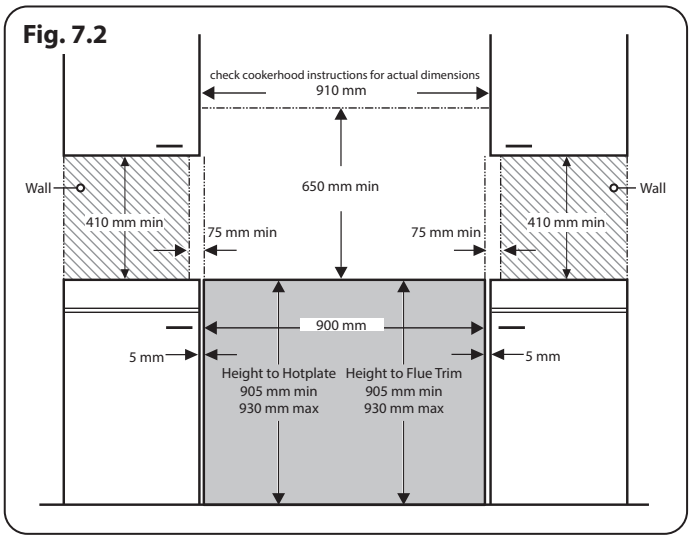

Positioning the cooker

The diagrams show the minimum recommended distance from the cooker to nearby surfaces (**Fig. 7.1** and **Fig. 7.2**).

The cooker should not be placed on a base.

Fig. 7.1 and **Fig. 7.2** Cookers installed into recess: The cooker must have side clearance **ABOVE** hob level of 75mm up to a height of 410mm. This can be reduced to 25mm if the surface of the side wall is non-combustible.

A minimum space of 650 mm is required between the top of the hotplate and a horizontal combustible surface.

*Any cookerhood should be installed in accordance with the hood manufacturer's instructions.

**Any splashback must be fitted in accordance with the manufacturers instructions. Allowance should be made for the additional height of the flue trim, which is fitted to the cooker hob.

Surfaces of furniture and walls at the sides and rear of the appliance should be heat, splash and steam resistant. Certain types of vinyl or laminate kitchen furniture are particularly prone to heat damage and discolouration. We cannot accept responsibility for damage caused by normal use of the cooker to any material that de-laminates or discolours at temperatures less than 65 °C above room temperature.

If a flush fit is required, fit the cooker up to the unit at one side then fit the unit the other side.

DO NOT box the cooker in – it must be possible to move the cooker in and out for cleaning and servicing.

If the cooker is not installed between units, a side panel extension that closes the gap to the wall at the rear is available as an optional extra kit.

Moving the cooker

⚠ **On no account try and move the cooker while it is plugged into the electricity supply.**

⚠ **The cooker is very heavy, so take great care.**

We recommend two people manoeuvre the cooker. Make sure that the floor covering is firmly fixed, or removed to prevent it being disturbed when moving the cooker around. To help you, there are two levelling rollers at the back and two screw-down levelling feet at the front.

Removing the oven door

To remove the oven door, open the door fully. Swivel the locking 'U' clips forward to the locking position (**Fig. 7.3**). Grip the sides of the door, lift upwards and then slide the door forwards (**Fig. 7.4**).

Lowering the two rear rollers

To adjust the height of the rear of the cooker, first fit a 13 mm spanner or socket wrench onto the hexagonal adjusting nut (**Fig. 7.5**). Rotate the nut – clockwise to raise – counter-clockwise to lower.

Make 10 complete (360°) turns clockwise.

Make sure you lower BOTH REAR ROLLERS.

Completing the move

Unfold the rear edge of the cardboard base tray. Grip the fascia panel and lift the front of the cooker slightly (**Fig. 7.6**).

Carefully push the cooker backwards off the pack base. Remove the pack base. Position the cooker close to its final position, leaving just enough space to get behind it.

⚠ **DO NOT use the control knobs to manoeuvre the cooker.**

Levelling

You are recommended to use a spirit level on a shelf in one of the ovens to check for level.

Place the cooker in its intended position, taking care not to twist it within the gap between the kitchen units as damage may occur to the cooker or the units.

The front feet and rear rollers can be adjusted to level the cooker. To adjust the height of the rear of the cooker turn the adjusting nuts at the front bottom corners of the cooker. To set the front feet turn the bases to raise or lower.

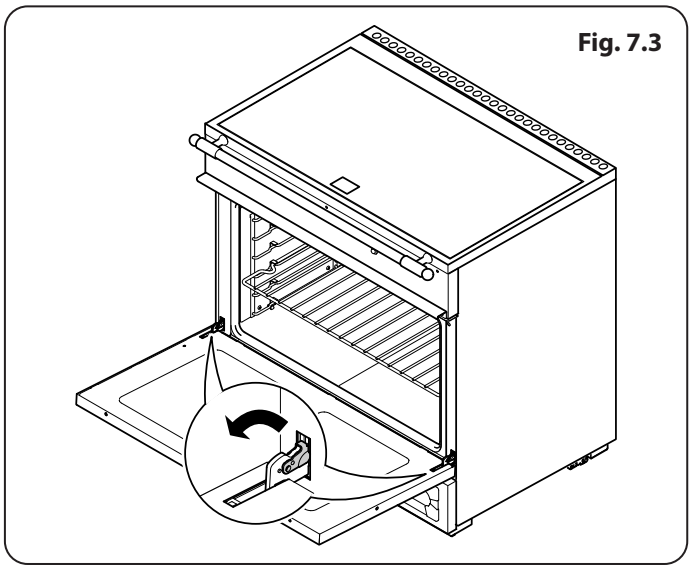
Fig. 7.3

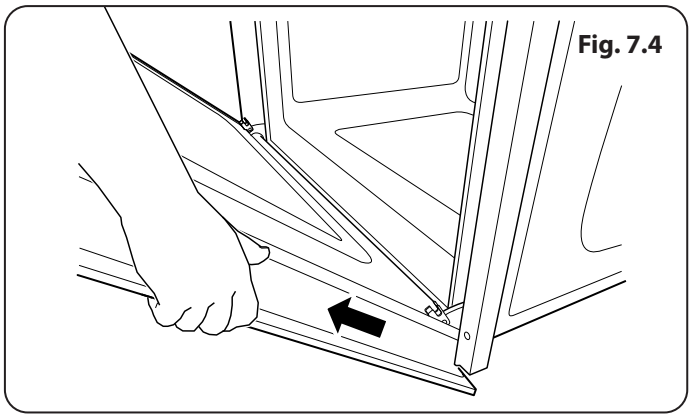
Fig. 7.4

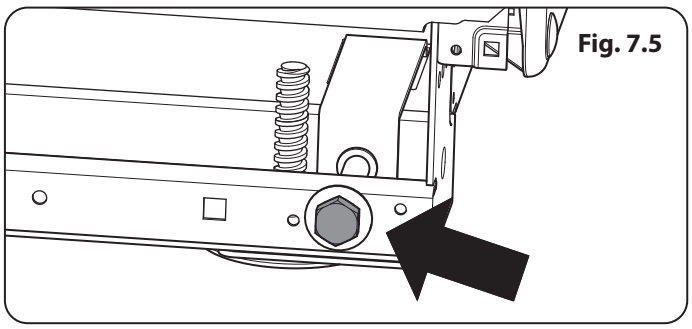
Fig. 7.5

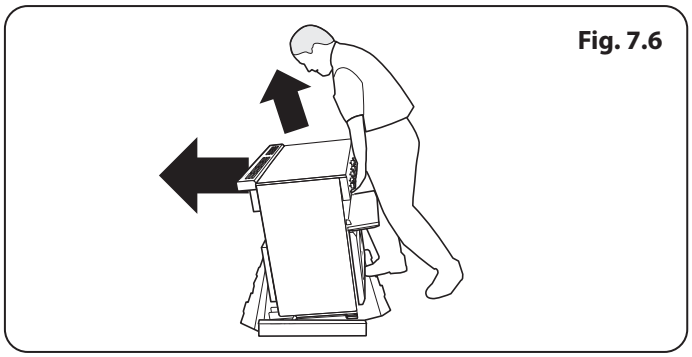
Fig. 7.6

Fig. 7.7

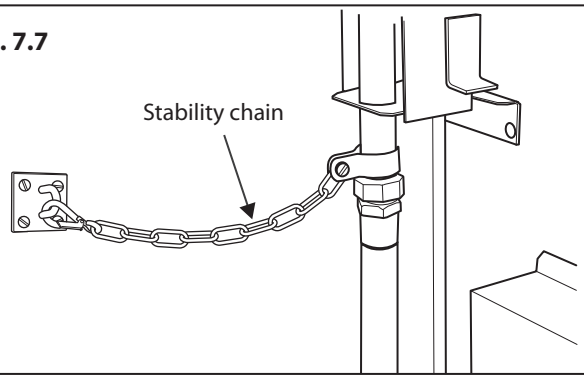

Fig. 7.8

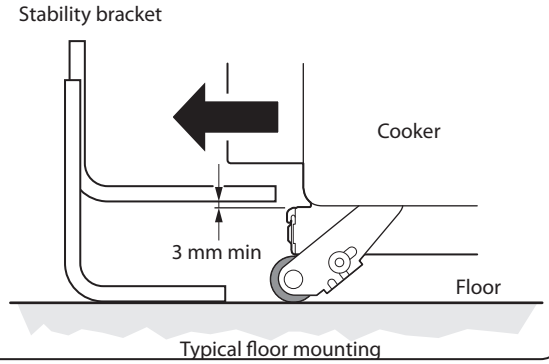

Fig. 7.9

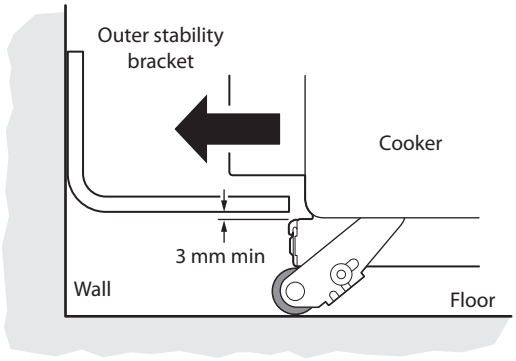

Fitting the stability bracket or chain

Unless otherwise stated, a cooker using a flexible gas connector must be secured with a suitable stability device.

Suitable stability devices are shown in **Fig. 7.7**, **Fig. 7.8** and **Fig. 7.9**.

If you are using a stability chain (**Fig. 7.7**) then the chain should be kept as short as is practicable and fixed firmly to the rear of the cooker.

If you are using a stability bracket (**Fig. 7.8** and **Fig. 7.9**), then adjust the bracket to give the smallest practicable clearance between the bracket and the engagement slot in the rear of the cooker.

Fit the bracket so that it engages as far as possible over the chassis of the cooker.

Electrical connection

The cooker must be installed by a qualified electrician, in accordance with all relevant British Standards/Codes of Practice (in particular BS 7671), or with the relevant national and local regulations.

WARNING: THE APPLIANCE MUST BE EARTHED.

NOTE: The cooker must be connected to the correct electrical supply as stated on the voltage label on the cooker, through a suitable cooker control unit incorporating a double-pole switch, having a contact separation of at least 3 mm in all poles.

The cooker MUST NOT be connected to an ordinary domestic power point.

Access to the mains terminal is gained by removing the electrical terminal cover box on the back panel. Connect the mains cable to the correct terminals for your electrical supply type (**Fig. 7.10** and **Fig. 7.11**). Check that the connections are correctly fitted and that the terminal screws are tight. Secure the mains cable using the cable clamp.

Repositioning the cooker following connection

If you need to move the cooker once it has been connected, make sure it is isolated at the electrical supply before gripping under the fascia panel and lifting the front of the cooker slightly (**Fig. 7.6**). Check behind the cooker to make sure that the electricity cable is not caught. As you progress, always make sure that the cable has sufficient slack to allow the cooker to move.

When you replace the cooker, check behind it again once more to make sure that the electricity cable is not caught or trapped.

Current Operated Earth Leakage Breakers

The combined use of your cooker and other domestic appliances may cause nuisance tripping, so we recommend that the cooker is protected on an individual RCD (Residual Current Device) or RCBO (Residual Current Breaker with Overload).

IF IN DOUBT, PLEASE CONSULT A SUITABLY QUALIFIED ELECTRICIAN.

Fig. 7.10

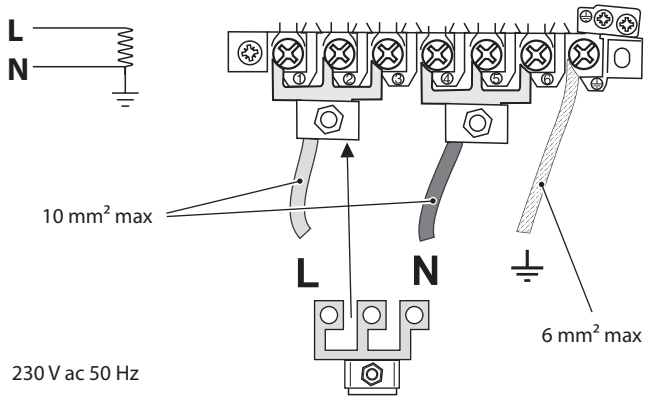

Fig. 7.11

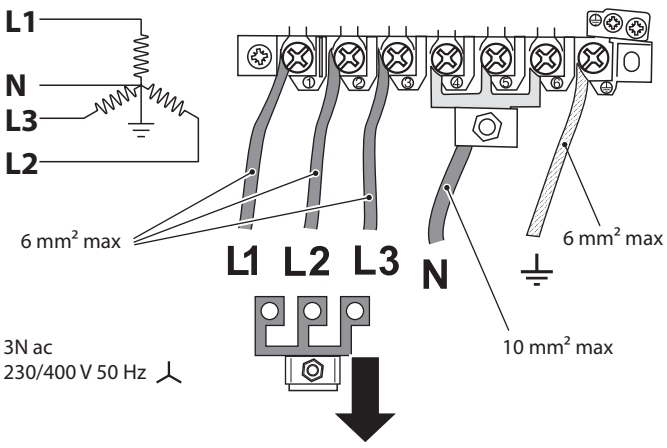

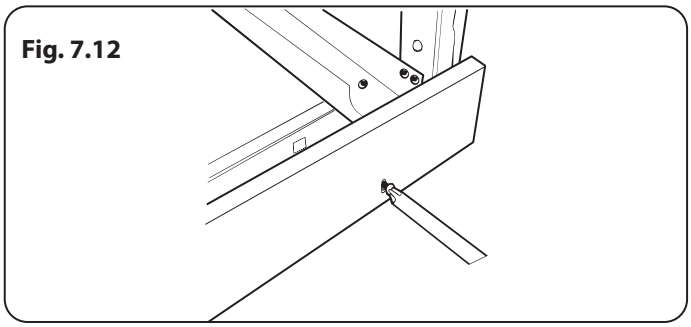

Final Checks

Hob Check

Check each cooking zone in turn. Be sure to use pans of the correct size and material.

Oven Check

NOTE: Make sure you have set the clock (see 'Section 2').

Turn on the oven. Check that the oven fans start to turn and it starts to heat up. Check that the oven lights are working.

Turn off the oven.

NOTE: The oven light bulb is not included in the guarantee.

Final Fitting

Fitting the Plinth

Remove the 3 screws for the plinth mounts along the front bottom edge of the range (**Fig. 7.12**). Fasten the plinth using these screws (alternative colour screws can be found in the loose parts pack).

Customer care

Please complete your details in this guide, inform the user how to operate the cooker and hand over the Instructions.

Thank you.

Fitting the drawer

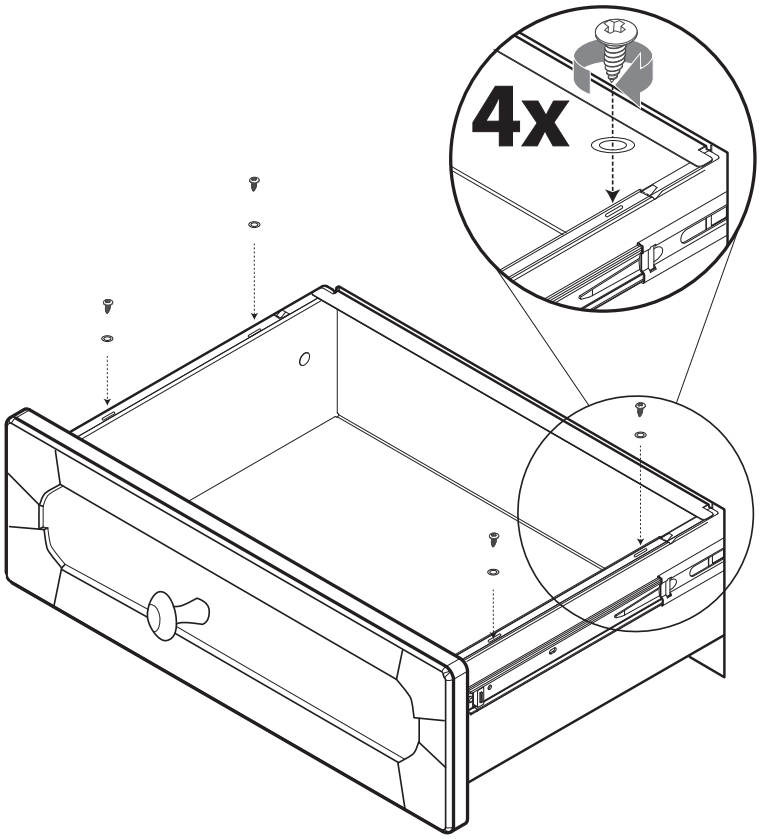

Removing the drawer

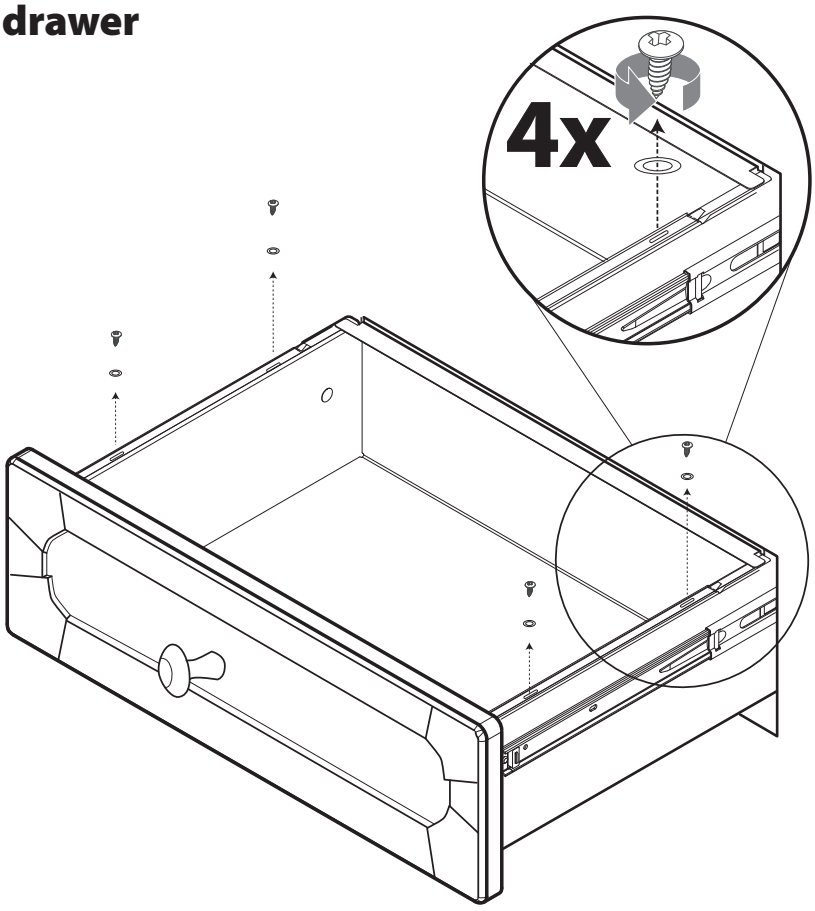

8. Circuit diagram

Oven

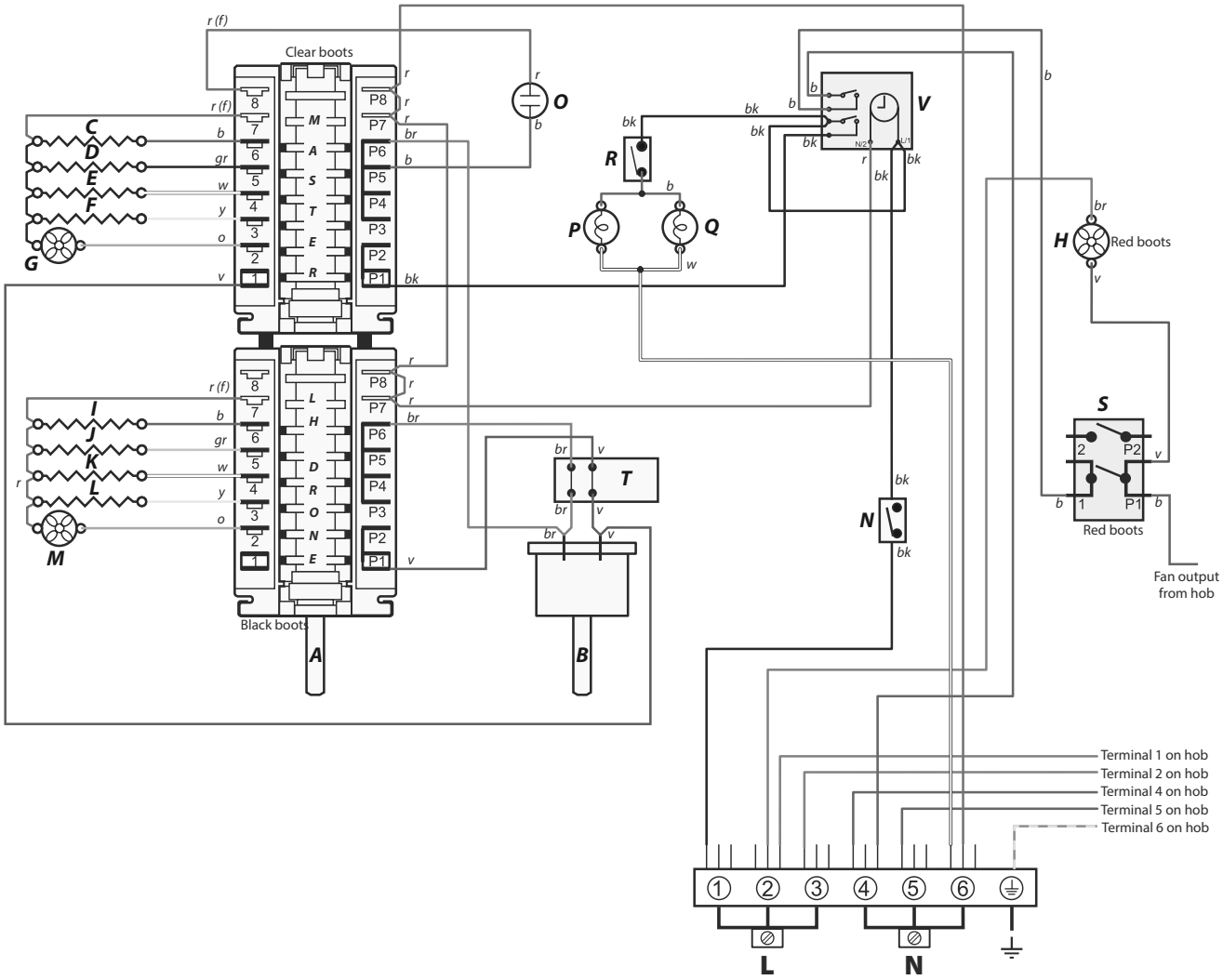

Key

The connections shown in the circuit diagram are for single-phase. The ratings are for 230 V 50 Hz.

Code	Description
A	Function controller
B	Temperature controller
C	Right-hand bottom element
D	Right-hand top element (outer)
E	Right-hand top element (inner)
F	Right-hand fan element
G	Right-hand fan
H	Cooling fan
I	Left-hand bottom element
J	Left-hand top element (outer)
K	Left-hand top element (inner)

Code	Description
L	Left-hand fan element
M	Left-hand fan
N	Thermostat protection
O	Oven neon
P	Oven light
Q	Oven light
R	Oven light switch
S	Thermostat front switch
T	Divider switch
V	Timer

Code	Colour
b	Blue
br	Brown
bk	Black
or	Orange
r	Red
v	Violet
w	White
y	Yellow
g/y	Green/yellow
gr	Grey
r(f)	Red (flag)

Induction Hob

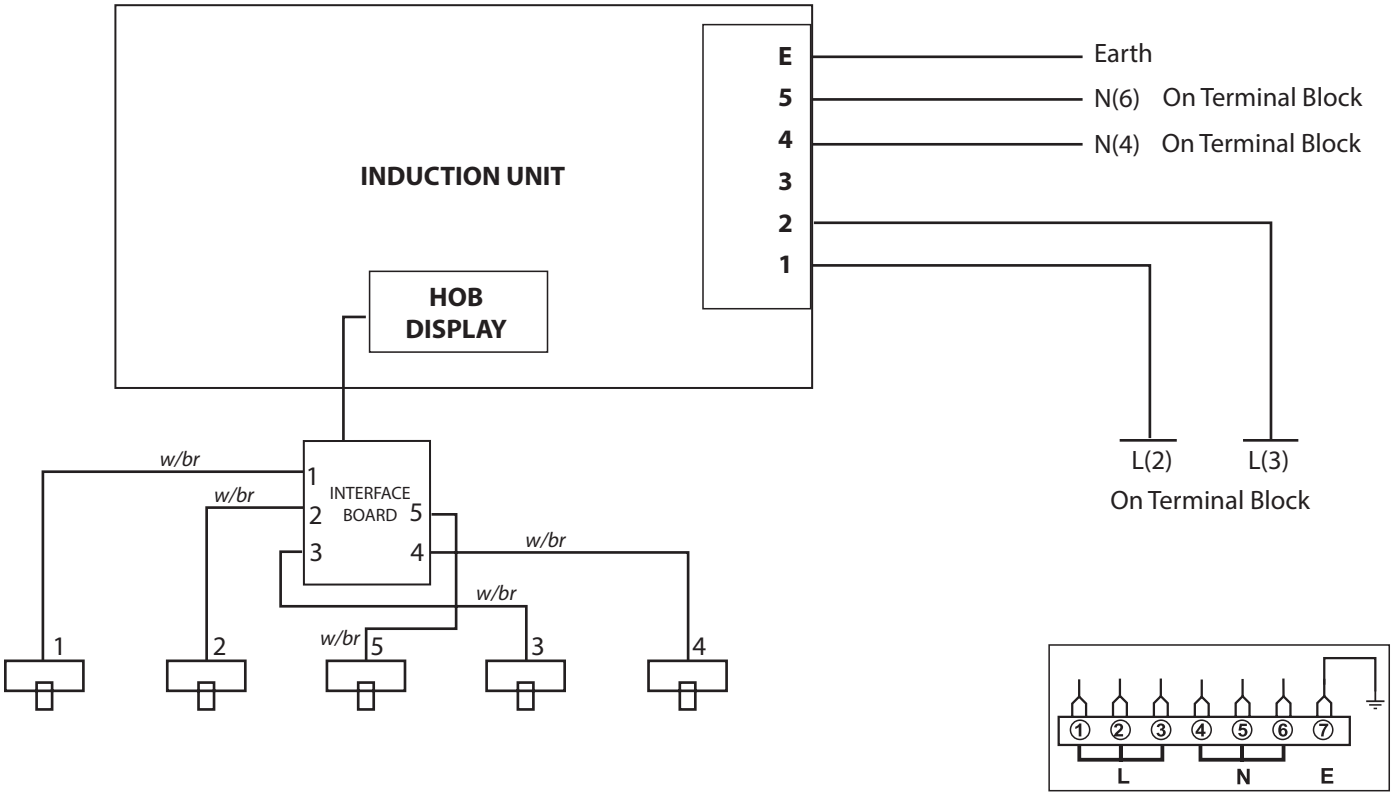

Code	Description
1	Left-hand front element
2	Left-hand back element
3	Right-hand back element
4	Right-hand front element
5	Centre element

Code	Colour
w/br	White or brown

9. Technical data

INSTALLER: Please leave these instructions with the user.

DATA BADGE LOCATION: Inside base drawer of cavity. Remove the drawer.

COUNTRY OF DESTINATION: GB, IE.

Connections

Electric	230 / 400 V ~ 50 Hz 3N

Dimensions

Model	Professional+ FX 90 Induction	
Overall height	905 minimum mm	930 maximum mm
Overall width	900 mm	
Overall depth	608 mm excluding handles, 642 mm including handles	
Minimum height above the hotplate	650 mm	

Hotplate ratings

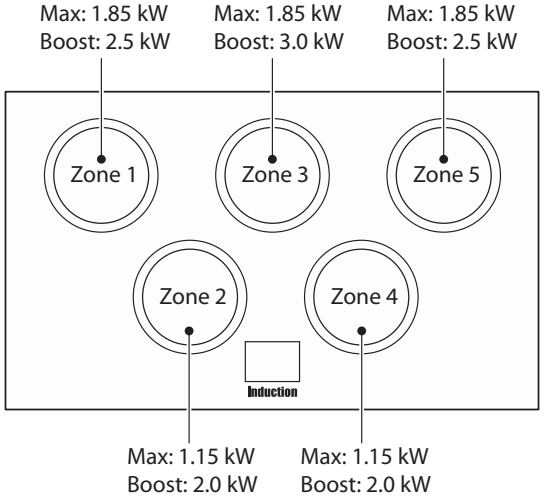

Hotplate energy saving tips

Use cookware with a flat base.

Use the correct size cookware.

Use cookware with a lid.

Minimise the amount of liquid or fat.

When liquid starts boiling, reduce the setting.

Oven energy saving tips

Cook meals together, if possible.

Keep the pre-heating time short.

Do not lengthen cooking time.

Do not open the oven door during the cooking period.

Do not forget to turn the appliance off at the end of cooking.

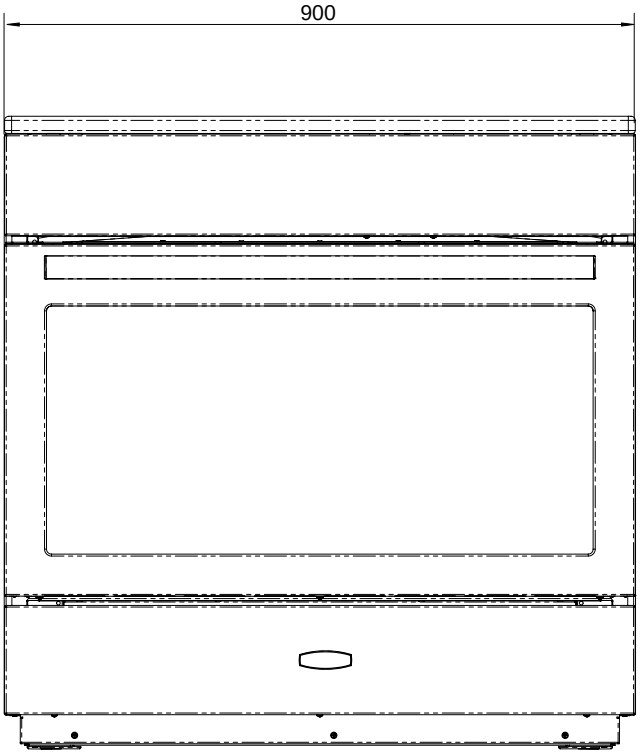
900

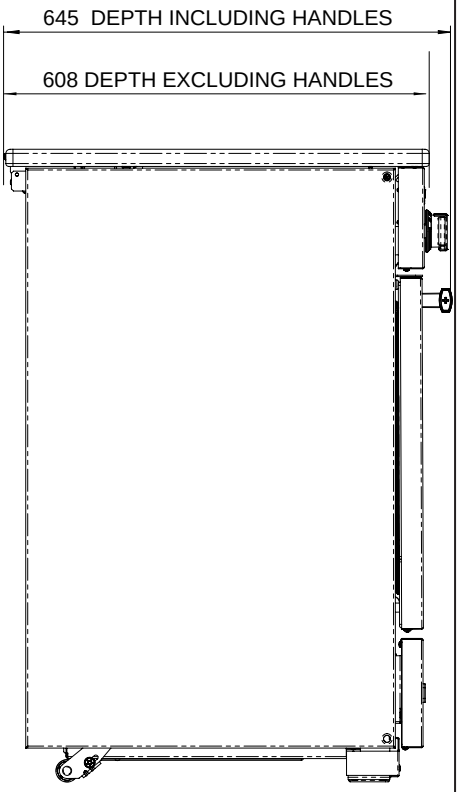
645 DEPTH INCLUDING HANDLES
608 DEPTH EXCLUDING HANDLES

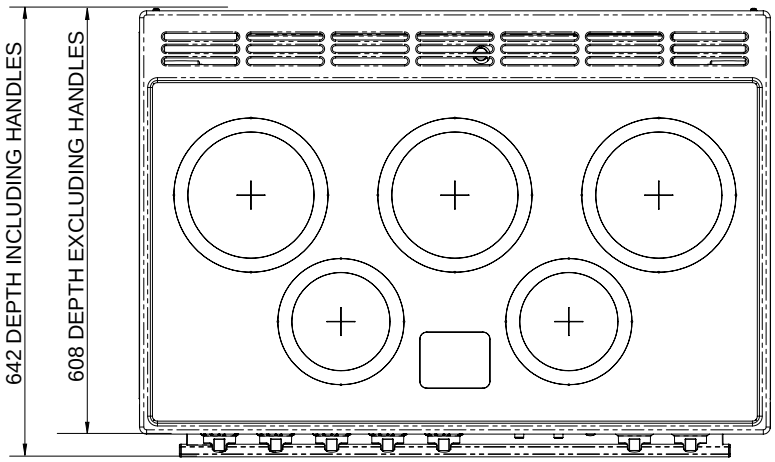
642 DEPTH INCLUDING HANDLES
608 DEPTH EXCLUDING HANDLES

Hotplate efficiency data

Brand	Rangemaster
Model Identification	Professional+ FX
Size	90 Single Cavity
Type	Induction

Type of Hob	Induction
Number of electric zones	5
Zone 1 - Ø cm	18.5
Heating Technology	
Energy Consumption (ECElectric cooking) - Wh/kg	172
Zone 2 - Ø cm	15.5
Heating Technology	
Energy Consumption (ECElectric cooking) - Wh/kg	180
Zone 3 - Ø cm	18.5
Heating Technology	
Energy Consumption (ECElectric cooking) - Wh/kg	172
Zone 4 - Ø cm	15.5
Heating Technology	
Energy Consumption (ECElectric cooking) - Wh/kg	180
Zone 5 - Ø cm	18.5
Heating Technology	
Energy Consumption (ECElectric cooking) - Wh/kg	172
Zone 6 - Ø cm	-
Heating Technology	
Energy Consumption (ECElectric cooking) - Wh/kg	-
Energy Consumption (ECElectric hob) - Wh/kg (*)	175

Information marked thus (*) is not required with mixed fuel hobs

Oven data

Brand		Rangemaster
Model identification		Professional+ FX
Type of oven		Electric
Mass	kg	119
Number of cavities		1
Single Cavity Efficiency		
Fuel type		Electric
Cavity type *Drop Down Door		Multifunction*
Power - conventional		2.75
Power - forced air convection		3.3
Volume	Litres	114
Energy consumption (electricity) - conventional	kWh / cycle	1.16
Energy consumption (electricity) - forced air convection	kWh / cycle	1.03
Energy efficiency index - conventional		112.8
Energy efficiency index - forced air convection		100.1
Energy class		A

Additional Information		
The oven complies with EN 60350-1		
Maximum output @ 230V 50Hz	Full	Divided
Fan element	3.31 kW	1.65 kW
Top element	3.49 kW	1.75 kW
Browning element	2.11 kW	1.06 kW
Bottom element	1.38 kW	0.69 kW

Maximum total electrical load at 230 V (approximate total including hob, oven lights, oven fan, etc.)	11.05 kW

NOTE

Name of Appliance & Colour*				
Appliance Serial Number*				
Fuel Type*	Natural Gas	☐	LP Gas	☐
	Dual Fuel	☐	Electric	☐
Retailer's Name & Address				
Date of Purchase				
Installer's Name & Address				
Installer's Telephone Number				
Date of Installation				

*This information is on the appliance data badge - look in the appliance instructions to find out where the data badge is located.

CONSUMER SERVICE

If you have any product enquiries, or in the event of a problem with your appliance once it has been installed, please telephone 01926 457628.

CONSUMER SERVICE LINES OPEN:

Monday to Thursday 8am–6pm
Friday 8am–5pm

WARRANTY

Your manufacturer warranty covers goods of our own brand for defective workmanship and materials for a period of 1 year from the date of purchase. This warranty covers mechanical breakdown and proven cosmetic and manufacturing defects.

You will receive an additional FREE full 12 months guarantee by registering your purchase using the FREEPOST form provided. Alternatively, call free on 0800 587 5747, quoting reference RMGX57A, or register online at www.rangemaster.co.uk.

Any damage, blemishes or chips identified upon receipt of the product must be reported within 7 days – proof of purchase may be required to establish validity. Scratches on the surface of ceramic hobs must be reported within 7 days. Scratches caused by usage are not covered. Accidental damage is not covered by the manufacturer's warranty.

For warranty compliance, the requirements are that the appliance:

- Has been correctly installed in accordance with current legislation, relevant British and European Standards and Codes of Practice, by a suitably competent person registered with Gas Safe or equivalent body and, where applicable, a qualified electrician.
- Has been used solely for domestic cooking purposes.
- If in use in the UK*, has not been taken abroad as a personal export. (In the Republic of Ireland conditions may vary, so consult your retailer.)
- Is not second-hand or a refurbished appliance. The manufacturer's warranty is not transferable.
- Has not been subject to misuse, accidental damage or modification, and has not deteriorated due to normal domestic wear and tear, and the manufacturer's recommendations concerning cleaning materials have been followed.
- Has not been repaired by persons or organisations other than those authorised to act on behalf of AGA Rangemaster.

Exceptions:

- Items not included under the free 1 year guarantee include pan supports, griddles, wok rings, baking trays, grill pans, trivets, filters, light bulbs and other consumable accessories.
- Any damage caused other than through normal use.
- Breakdowns associated with cooking spillage.
- Cosmetic deterioration deemed to be normal wear and tear.

This warranty is in addition to your Statutory Rights.

* Only certain models can be adapted for use with Mains Gas supplied in the Channel Islands and Isle of Man.

OUT OF WARRANTY

We recommend that Rangemaster appliances are serviced regularly throughout their life to maintain optimum performance and efficiency. Service work should only be carried out by technically competent and suitably qualified personnel.

For your own safety, always make sure that work is carried out by a Gas Safe registered engineer for gas appliances or an approved electrician for electrical models.

For a competetive quote and to arrange for a Rangemaster approved engineer to attend, call Consumer Services on: 01926 457628.

SPARE PARTS

To maintain optimum and safe performance, we recommend that only genuine Rangemaster spare parts are used. These are available from most major spares stockists, including ourselves.

Contact Consumer Services on 01926 457628, who will be happy to help.

STANDARDS

Rangemaster cookers are designed and manufactured to a recognised international quality standard, which meets the requirements of BS EN ISO 9001, BS EN ISO 14001 and OHSAS 18001 for continually improving environmental procedures.

Rangemaster cookers comply with the essential requirements of the appropriate European Directives, and carry the CE mark.

RANGEmaster

UNRIVALLED PERFORMANCE

Clarence Street
Royal Leamington Spa
Warwickshire
CV31 2AD
England

Consumer Services: +44 (0)1926 457628.
Fax: +44 (0)1926 450526
E-mail: consumers@agarangemaster.co.uk
www.rangemaster.co.uk

For UK Trade Enquiries Tel: +44 (0)115 946 4000
Fax: +44 (0)115 973 6602
E-mail: sales@agarangemaster.co.uk

For ROI Enquiries Tel: 1850 302 502

Rangemaster is a trading name of AGA Rangemaster Limited
Registered in England and Wales. Registration No. 354715
Registered Office: c/o Aga Rangemaster, Meadow Lane, Long Eaton, Nottingham, NG10 2GD

AGA RANGEmaster

Rangemaster continuously seeks improvements in specification, design and production of products and thus, alterations take place periodically. Whilst every effort is made to produce up-to-date literature, this brochure should not be regarded as an infallible guide to current specification, nor does it constitute an offer for the sale of any particular appliance.