SIEMENS

Washing machine

WG56B2ATGB

en User manual and installation instructions

Register your product on My Siemens and discover exclusive services and offers.
siemens-home.bsh-group.com/welcome

The future moving in.

Siemens Home Appliances

Futher information and explanations are available online:

Table of contents

1 Safety 4
1.1 General information 4
1.2 Intended use 4
1.3 Restriction on user group 4
1.4 Safe installation 5
1.5 Safe use 7
1.6 Safe cleaning and maintenance 9

2 Preventing material damage 10

3 Environmental protection and saving energy 11
3.1 Disposing of packaging 11
3.2 Save energy and conserve resources 11
3.3 Energy saving mode 11

4 Installation and connection 12
4.1 Unpacking the appliance 12
4.2 Contents of package 12
4.3 Requirements for the installation location 12
4.4 Removing the transit bolts 13
4.5 Connecting the appliance 14
4.6 Aligning the appliance 15

5 Familiarising yourself with your appliance 17
5.1 Appliance 17
5.2 Detergent drawer 17
5.3 Control panel 18
5.4 Operating logic 18

6 Before using for the first time .. 20
6.1 Starting an empty washing cycle 20

7 Display 21

8 Buttons 24

9 Programmes 27

10 Accessories 31

11 Laundry 31
11.1 Preparing the laundry 31

12 Detergents and care products 31

13 Basic operation 32
13.1 Switching on the appliance ... 32
13.2 Setting a programme 32
13.3 Adjusting the programme settings 32
13.4 Saving the programme settings 33
13.5 Loading laundry 33
13.6 Adding detergent and care product 33
13.7 Starting the programme 33
13.8 Soaking laundry 33
13.9 Adding laundry 34
13.10 Cancelling the programme 34
13.11 Resuming the programme when the programme status is Rinse Hold 34
13.12 Unloading the laundry 34
13.13 Put the appliance into standby mode 34

14 Childproof lock 35
14.1 Activating the childproof lock 35
14.2 Deactivating the childproof lock 35

15 Intelligent dosing system 35
15.1 Starting the programme with intelligent dosing system..... 35
15.2 Filling the dispensers 36
15.3 Dispenser contents 37
15.4 Basic dosage 37

16 Home Connect 37
16.1 Setting up the Home Connect app 38
16.2 Setting up Home Connect..... 38
16.3 Home Connect menu 38
16.4 Activating Wi-Fi on the appliance..... 39
16.5 Deactivating Wi-Fi on the appliance..... 39
16.6 Resetting the appliance network settings 39
16.7 Remote start..... 39
16.8 Remote diagnostics 39
16.9 Data protection..... 40

17 Basic settings..... 41
17.1 Overview of the basic settings..... 41
17.2 Changing the basic settings..... 42

18 Programme counter 42
18.1 Calling up the programme counter 42

19 Cleaning and servicing 42
19.1 Cleaning the drum..... 42
19.2 Cleaning the detergent drawer..... 43
19.3 Cleaning the drain pump..... 44
19.4 Cleaning the intake opening in the rubber gasket..... 47

20 Troubleshooting..... 48
20.1 Emergency release 60

21 Transportation, storage and disposal 60
21.1 Removing the appliance 60
21.2 Inserting the transit bolts..... 60
21.3 Using the appliance again 60
21.4 Disposing of old appliance ... 61

22 Customer Service..... 61
22.1 Product number (E-Nr.), production number (FD) and consecutive numbering (Z-Nr.) 61
22.2 AQUA-STOP guarantee..... 62

23 Consumption values..... 63

24 Technical data 64
24.1 Information regarding Free and Open Source Software... 64

25 Declaration of Conformity 65

1 Safety

Observe the following safety instructions.

1.1 General information

- Read this instruction manual carefully.
- Keep the instruction manual and the product information safe for future reference or for the next owner.
- Do not connect the appliance if it has been damaged in transit.

1.2 Intended use

Only use this appliance:
- For washing machine-washable fabrics and hand-washable wool in accordance with the care label.
- With tap water and commercially available detergents and care products suitable for washing machines.
- in private households and in enclosed spaces in a domestic environment.
- up to an altitude of max. 4000 m above sea level.

1.3 Restriction on user group

This appliance may be used by children aged 8 or over and by people who have reduced physical, sensory or mental abilities or inadequate experience and/or knowledge, provided that they are supervised or have been instructed on how to use the appliance safely and have understood the resulting dangers.
Do not let children play with the appliance.
Cleaning and user maintenance must not be performed by children unless they are being supervised.
Keep children under the age of 3 years and pets away from the appliance.

1.4 Safe installation

⚠ WARNING – Risk of electric shock!

Incorrect installation is dangerous.

- Connect and operate the appliance only in accordance with the specifications on the rating plate.
- Connect the appliance to a power supply with alternating current only via a properly installed socket with earthing.
- The protective conductor system of the domestic electrical installation must be properly installed. The installation must have a sufficiently large cross section.
- When using a residual current circuit breaker, only use a type with the ⊟ mark.
- Never equip the appliance with an external switching device, e.g. a timer or remote control.
- When the appliance is installed, the mains plug of the power cord must be freely accessible. If free access is not possible, an all-pole isolating switch must be installed in the permanent electrical installation according to the installation regulations.
- When installing the appliance, check that the power cable is not trapped or damaged.

If the insulation of the power cord is damaged, this is dangerous.

- Never let the power cord come into contact with hot appliance parts or heat sources.
- Never let the power cord come into contact with sharp points or edges.
- Never kink, crush or modify the power cord.

⚠ WARNING – Risk of fire!

It is dangerous to use an extended power cord and non-approved adapters.

- Do not use extension cables or multiple socket strips.
- Only use adapters and power cords approved by the manufacturer.
- If the power cord is too short and a longer one is not available, please contact an electrician to have the domestic installation adapted.

⚠ WARNING – Risk of injury!

The high weight of the appliance may result in injury when lifted.

- Do not lift the appliance on your own.

If this appliance is not correctly installed in a washer-dryer stack, the installed appliance may fall.

- Only stack the dryer on a washing machine using the connection kit from the dryer manufacturer . No other installation method is permitted.
- Do not install the appliance in a washer-dryer stack if the dryer manufacturer does not offer a suitable connection kit.
- Do not install appliances from different manufacturers and with varying depths and widths in a washer-dryer stack.
- Do not install a washer-dryer stack on a platform; the appliances may tip over.

⚠ WARNING – Risk of suffocation!

Children may put packaging material over their heads or wrap themselves up in it and suffocate.

- Keep packaging material away from children.
- Do not let children play with packaging material.

⚠ CAUTION – Risk of injury!

The appliance may vibrate or move when in use.

- Place the appliance on a clean, even, solid surface.
- Align the appliance using the appliance feet and a spirit level.

If hoses and power cords have been laid incorrectly, this causes a tripping hazard.

- Lay hoses and power cords in such a way that there is no risk of tripping.

If the appliance is moved by holding onto protruding components, such as the appliance door, the parts may break off.

- Do not move the appliance by holding onto protruding parts.

⚠ CAUTION – Risk of cutting!

Touching sharp edges on the appliance may lead to cuts.

- Do not touch the sharp edges on the appliance.

- Wear protective gloves when installing and transporting the appliance.

1.5 Safe use

⚠ WARNING – Risk of electric shock!

If the appliance or the power cord is damaged, this is dangerous.

- Never operate a damaged appliance.
- Never pull on the power cord to unplug the appliance. Always unplug the appliance at the mains.
- If the appliance or the power cord is damaged, immediately unplug the power cord or switch off the fuse in the fuse box and turn off the water tap.
- Call customer services. → *Page 61*

An ingress of moisture can cause an electric shock.

- Only use the appliance in enclosed spaces.
- Never expose the appliance to intense heat or humidity.
- Do not use steam- or high-pressure cleaners, hoses or sprays to clean the appliance.

⚠ WARNING – Risk of harm to health!

Children can lock themselves in the appliance, thereby putting their lives at risk.

- Do not install the appliance behind a door as this may obstruct the appliance door or prevent it from opening.
- With redundant appliances, unplug the power cord. Then cut through the cord and damage the lock on the appliance door beyond repair so that the appliance door will no longer close.

⚠ WARNING – Risk of suffocation!

Children may breathe in or swallow small parts, causing them to suffocate.

- Keep small parts away from children.
- Do not let children play with small parts.

⚠ WARNING – Risk of poisoning!
Detergents and care products may result in poisoning if consumed.
- If accidentally swallowed, seek medical advice.
- Keep detergents and care products out of the reach of children.

⚠ WARNING – Risk of explosion!
Laundry that has been pretreated with cleaning agents that contain solvents may cause an explosion in the appliance.
- Rinse pretreated laundry thoroughly with water before washing.

⚠ CAUTION – Risk of injury!
The covering plate may break if you stand on or climb onto the appliance.
- Do not stand on or climb onto the appliance.

The appliance may tip over if you sit on or lean against the open door.
- Do not sit on or lean against the appliance door.
- Do not place any objects on the appliance door.

Reaching into the drum while it is still turning may cause hand injuries.
- Wait for the drum to come to a complete stop before reaching inside.

⚠ CAUTION – Risk of scalding!
When you wash at high temperatures, the detergent solution gets hot.
- Do not touch the hot detergent solution.

⚠ CAUTION – Risk of chemical burns!
If the detergent drawer is opened, detergent and care products may spray out from the appliance. Contact with eyes or skin may cause irritation.
- Rinse eyes and/or skin thoroughly with clean water if they come into contact with detergents or care products.
- If accidentally swallowed, seek medical advice.
- Keep detergents and care products out of the reach of children.

1.6 Safe cleaning and maintenance

⚠ WARNING – Risk of electric shock!

Incorrect repairs are dangerous.

- Repairs to the appliance should only be carried out by trained specialist staff.
- Only use genuine spare parts when repairing the appliance.
- If the power cord of this appliance is damaged, it must be replaced by the manufacturer, the manufacturer's Customer Service or a similarly qualified person in order to prevent any risk.

An ingress of moisture can cause an electric shock.

- Do not use steam- or high-pressure cleaners, hoses or sprays to clean the appliance.

⚠ WARNING – Risk of injury!

The use of non-original spare parts and non-original accessories is dangerous.

- Only use the manufacturer's original spare parts and original accessories.

⚠ WARNING – Risk of poisoning!

Poisonous fumes may be given off if you use cleaning agents that contain solvents.

- Do not use cleaning agents that contain solvents.

2 Preventing material damage

ATTENTION!
The functionality of the appliance may be impaired if you use the wrong quantity of fabric softener, detergent, care product or cleaning agent.
- Follow the dosage recommendations from the manufacturer.

Exceeding the maximum load capacity impairs the function of the appliance.
- Observe the maximum load capacity for each programme and do not exceed it.
  → *"Programmes", Page 27*

The appliance is secured for transportation using transit bolts. Transit bolts which have not been removed may result in material damage and damage to the appliance.
- Before starting up the appliance, remove the transit bolts completely and keep them in a safe place.
- Before transport, fit the transit bolts fully in order to prevent damage in transit.

Material damage may be caused if the water inlet hose is connected incorrectly.
- Tighten the screw connections on the water inlet until they are hand-tight.
- Ideally, connect the water inlet hose directly to the water tap, without any additional connecting elements such as adapters, extensions, valves or similar.
- Make sure that the valve housing for the water inlet hose does not come into contact with its surroundings and is not subjected to any external forces.
- Ensure that the inner diameter of the water tap is at least 17 mm.
- Make sure that the length of the thread on the connection to the water tap is at least 10 mm.

If the water pressure is too high or too low, the appliance may not be able to operate properly.
- Ensure that the water pressure in the water supply system is at least 100 kPa (1 bar) and max. 1000 kPa (10 bar).
- If the water pressure exceeds the maximum value specified, a pressure-reducing valve must be installed between the drinking water connection and the hose set of the appliance.
- Do not connect the appliance to the mixer tap of an unpressurised hot-water boiler.

Modified or damaged water hoses may result in material damage and damage to the appliance.
- Never kink, crush, modify or cut through water hoses.
- Only use the water hoses supplied with the appliance or genuine spare hoses.
- Never re-use water hoses that have been used before.

Operating the appliance using water that is dirty or too hot may lead to material damage and damage to the appliance.
- Only operate the appliance with cold mains water.

Unsuitable cleaning products may damage the surfaces of the appliance.
- Do not use harsh or abrasive detergents.
- Do not use cleaning products with a high alcohol content.
- Do not use hard scouring pads or cleaning sponges.
- Clean the appliance with nothing but water and a soft, damp cloth.

- Remove all detergent residue, spray residue or other residues immediately if they come into contact with the appliance.

3 Environmental protection and saving energy

3.1 Disposing of packaging

The packaging materials are environmentally compatible and can be recycled.

- Sort the individual components by type and dispose of them separately.

3.2 Save energy and conserve resources

If you follow these instructions, your appliance will use less electricity and less water.

Choose programmes with low temperatures and longer wash times and use maximum load capacity.

- ✔ Energy consumption and water consumption is most efficient.

Add detergent based on the laundry's degree of soiling.

- ✔ For light to normal soiling, a smaller amount of detergent is sufficient. Observe the dosage recommendation from the detergent manufacturer.

Reduce the washing temperature for lightly and normally soiled laundry.

- ✔ At lower temperatures, the appliance consumes less energy. For light to normal soiling, lower temperatures than indicated on the care label are also sufficient.

Set the maximum spin speed if you want to dry the laundry in the tumble dryer afterwards.

- ✔ The drier the laundry, the shorter the programme duration when drying which, in turn, reduces energy consumption. A higher spin speed reduces the residual moisture in the laundry and increases the volume of the spin noise.

Wash the laundry without prewash.

- ✔ Washing with prewash increases the programme duration and increases energy and water consumption.

The appliance has a continuous automatic load adjustment function.

- ✔ Depending on the type of fabric and load capacity, the continuous automatic load adjustment function optimally adjusts the water consumption and programme duration.

The appliance comes with an AquaSensor.

- ✔ During the rinse cycle, the AquaSensor checks the degree of turbidity of the rinsing water, and adjusts the duration and number of rinse cycles accordingly.

3.3 Energy saving mode

If you do not use the appliance for an extended period, it automatically switches to energy-saving mode. Energy-saving mode ends when you use the appliance again.
If you do not continue operating the appliance, it switches to standby mode.

4 Installation and connection

4.1 Unpacking the appliance

ATTENTION!
Objects remaining in the drum that are not designed for operation with the appliance may cause material damage and damage to the appliance.
- Remove these objects, along with all supplied accessories, from the drum before starting the appliance.

1. Remove any packaging and protective covers completely from the appliance.
   → *"Disposing of packaging", Page 11*
2. Check the appliance for visible damage.
3. Open the door.
4. Remove any accessories from the drum.
5. Close the door.

4.2 Contents of package

After unpacking all parts, check for any damage in transit and completeness of the delivery.

ATTENTION!
If the appliance is operated with incomplete or defective accessories, the appliance may not be able to operate properly, or this may result in material damage or damage to the appliance.
- Do not operate the appliance with incomplete or defective accessories.
- Replace the accessories in question before operating the appliance.
  → *"Accessories", Page 31*

Note: The appliance has been tested at the factory to check it is in working order. As a result, water stains may remain in the appliance. These marks will disappear after the first wash cycle.

The delivery consists of the following:
- Washing machine
- Accompanying documents
- Transit bolts
  → *"Removing the transit bolts", Page 13*
- Cover caps
- Elbow for securing the water outlet hose

4.3 Requirements for the installation location

⚠ **WARNING**
Risk of electric shock!
The appliance contains live parts. Touching live parts is dangerous.
- Do not operate the appliance without a cover cap.

⚠ **WARNING**
Risk of injury!
When using the appliance on a base, the appliance may tip over.
- Always secure the feet of the appliance to a base using the manufacturer's fixing brackets → *Page 31* before using the appliance for the first time.

ATTENTION!
If residual water in the appliance freezes, this may cause damage to the appliance.
- Do not install or operate this appliance anywhere that is liable to experience frost or outdoors.

If the appliance is tilted at an angle greater than 40°, residual water may leak out of the appliance and cause material damage.

- Tilt the appliance carefully.
- Transport the appliance in an upright position.

Installation location	Requirements
Base 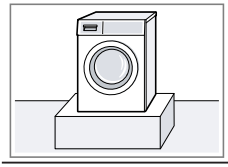	Secure the appliance with fixing brackets → *Page 31*.
Wooden joist floor 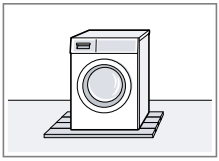	Place the appliance on a water-resistant wooden board (minimum thickness of 30 mm) which is screwed tightly to the floor.
Kitchen unit 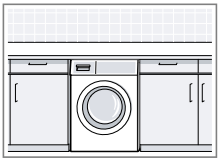	Only install the appliance underneath a continuous worktop that is securely connected to adjacent cabinets. Required niche width: 60 cm.
Against a wall 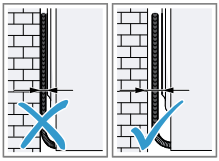	Do not trap the power cord or the hoses between the wall and the appliance.

4.4 Removing the transit bolts

The appliance is secured for transportation using transit bolts on the rear of the appliance.

Note: Keep the transit bolt screws and the sleeves in a safe place for future transport.
→ *"Inserting the transit bolts", Page 60*

1. Pull the hoses out of the holders.

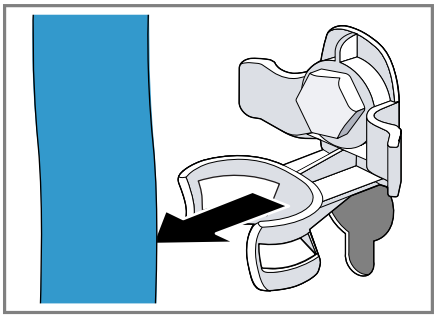

2. Unscrew ① and remove ② all of the screws for the 4 transit bolts using a WAF 13 wrench.

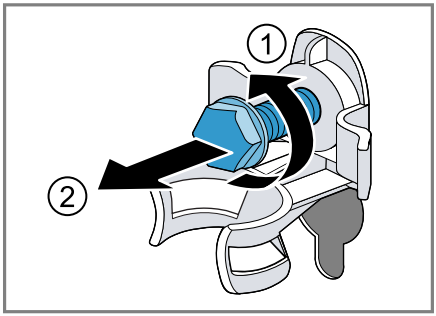

3. Remove the power cable from the holder.

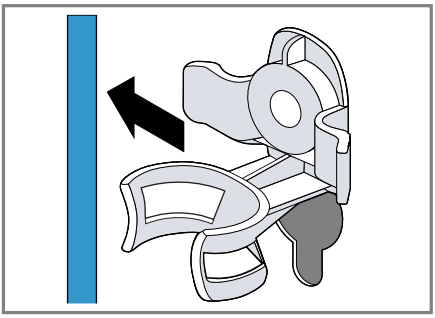

4. Remove the 4 sleeves.

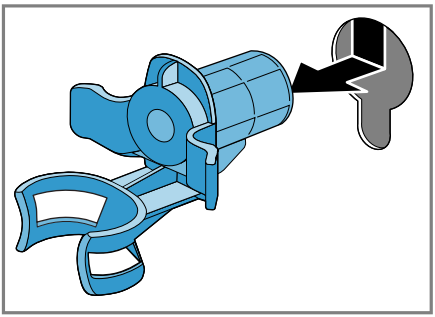

5. Put on the 4 cover caps.

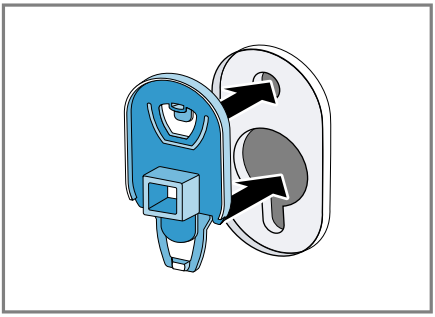

6. Push the 4 cover caps downwards.

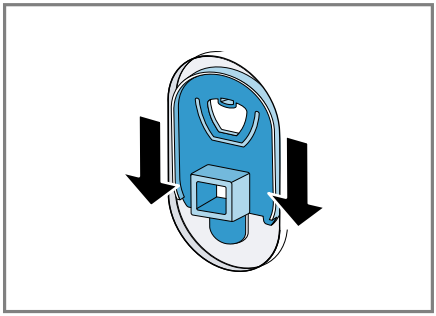

Note: To install the transport locks to transport the appliance, perform these steps again in the reverse order.

4.5 Connecting the appliance

Connecting the water inlet hose

⚠ **WARNING**
Risk of electric shock!
The appliance contains live parts. Touching live parts is dangerous.
- Do not immerse the electrical AquaStop valve in water.

1. Connect the water inlet hose to a tap (26.4 mm = 3/4").

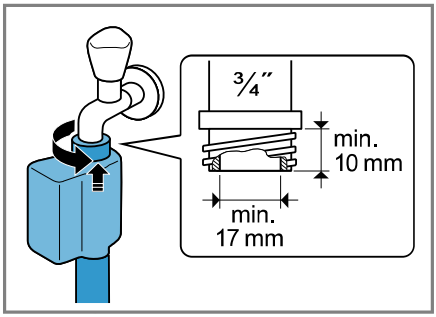

2. Open the water tap carefully and check that the connection points are tight.

Water outlet connection types

This information is intended to help you to connect this appliance to the water outlet.

ATTENTION!
When draining, the water outlet hose is subject to water pressure and may come loose from the installed connection point.

- Secure the water outlet hose against unintentional loosening.

Note: Observe the draining heights. The maximum draining height is 100 cm.

Siphon 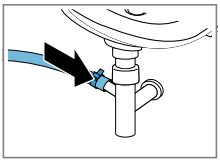	Secure the connection point with a (24–40 mm) hose clamp.
Sink 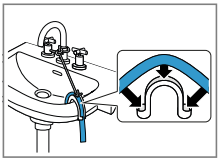	Fix and secure the water outlet hose with an elbow.
Plastic pipe with rubber sleeve or gully 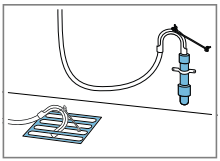	Fix and secure the water outlet hose with an elbow.

Connecting the appliance to the electricity supply

Note: Your electrical domestic installation for this appliance must comply with the local legal provisions and safety regulations, and should include a residual current circuit-breaker.

1. Insert the mains plug of the appliance's power cable in a socket nearby.

   The connection details of the appliance can be found under Technical data → *Page 64*.
2. Check the mains plug is inserted properly.

4.6 Aligning the appliance

In order to reduce noise and vibration and to prevent the appliance from moving, align the appliance correctly.

1. Use a WAF 17 wrench to loosen the lock nuts in a clockwise direction.

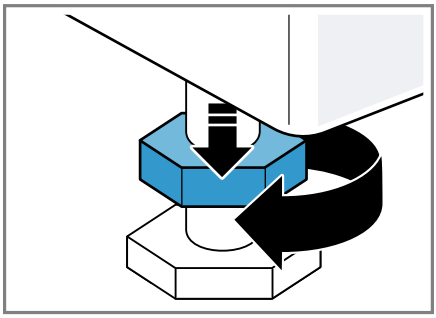

2. To align the appliance, turn the appliance feet. Check that the appliance is level using a spirit level.

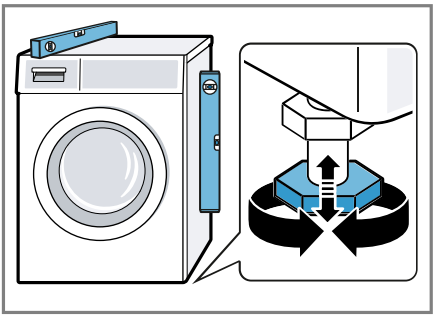

All appliance feet must stand firmly on the ground.

3. Use a WAF 17 wrench to tighten the lock nuts against the housing until they are hand-tight.

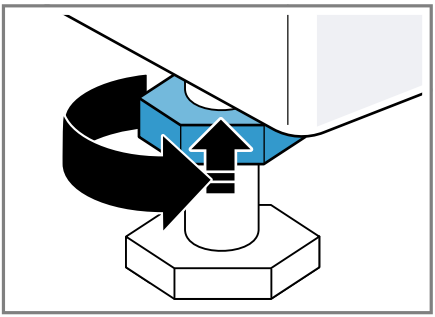

In doing so, hold the foot tight and do not adjust its height.

5 Familiarising yourself with your appliance

5.1 Appliance

You can find an overview of the parts of your appliance here.

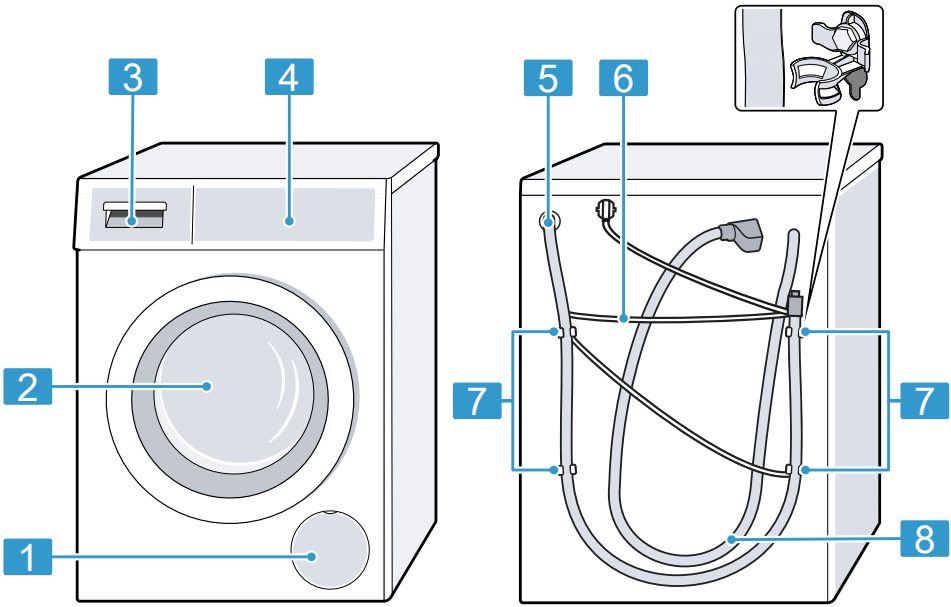

On certain models, specific details such as the colour and shape may differ from those pictured.

1	Maintenance flap for the drain pump → *Page 44*
2	Door
3	Detergent drawer → *Page 17*
4	Control panel → *Page 18*
5	Water outlet hose → *Page 15*
6	Power cord → *Page 15*
7	Transit bolts → *Page 13*
8	Water inlet hose → *Page 14*

5.2 Detergent drawer

Note: Observe the manufacturer's instructions on the use and dosage of the detergent and care product and the information in the programme descriptions.
→ *"Programmes", Page 27*

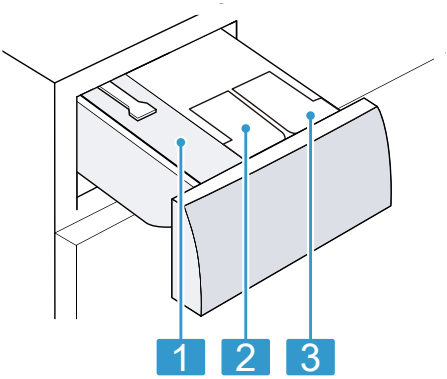

1	Manual dosing compartment
2	❀/🏷: Dispenser for fabric softener or liquid detergent
3	🏷: Dispenser for liquid detergent

5.3 Control panel

You can use the control panel to configure all functions of your appliance and to obtain information about the operating status.

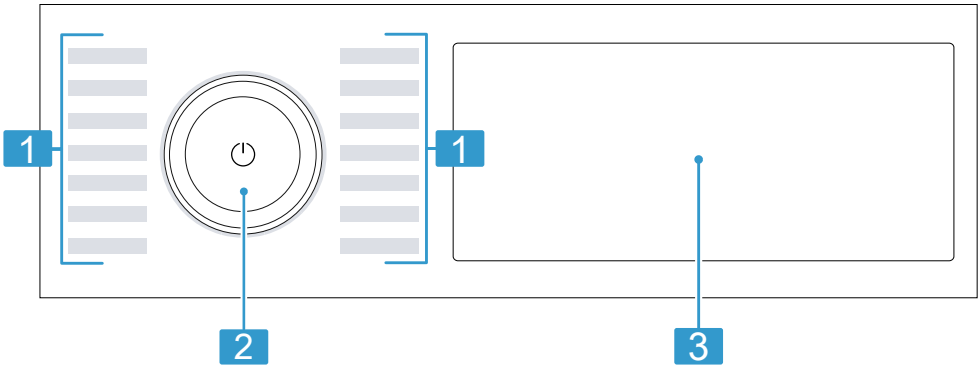

1	Programmes → *Page 27*
2	Programme selector → *Page 32*
3	Buttons and display → *Page 21*

5.4 Operating logic

Some areas of the display are buttons and respond to touch. You can activate, deactivate or change set-

tings by pressing the buttons. The activated settings are highlighted in colour on the display.

ATTENTION!
Pressing on the display with force may cause damage.
- Do not apply heavy pressure on the display.
- Do not press on the display using pointed or sharp objects.

Displaying or hiding additional buttons

Some buttons are hidden for a reduced display. If you display these additional buttons on the display, you can activate or deactivate the corresponding settings.

1. To display the additional buttons, briefly press **+ Options**.

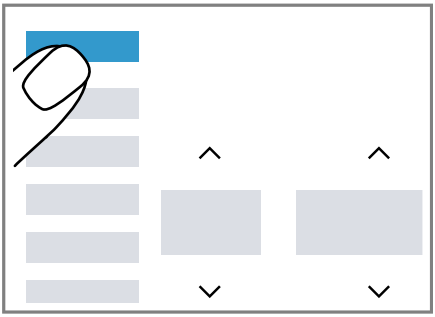

✔ The display shows all additional buttons.

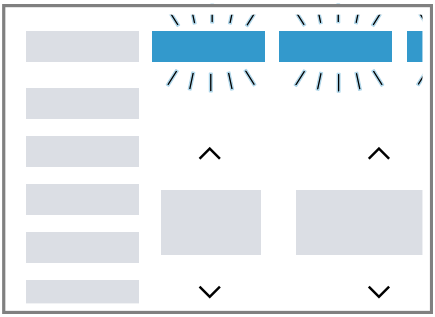

2. To hide the additional buttons, briefly press **+ Options** again.

Adjusting the display of additional buttons

You can adjust the buttons that are also displayed to suit your needs and permanently display your frequently used settings.

1. Press and hold **+ Options** for approx. 3 seconds.

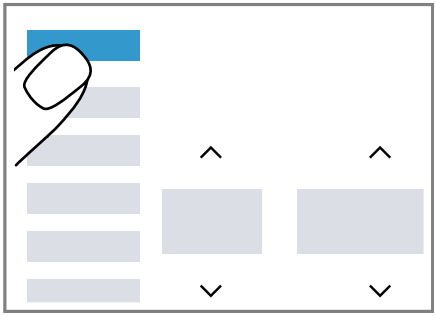

✔ The additional buttons flash on the display.

2. Briefly press the individual buttons.

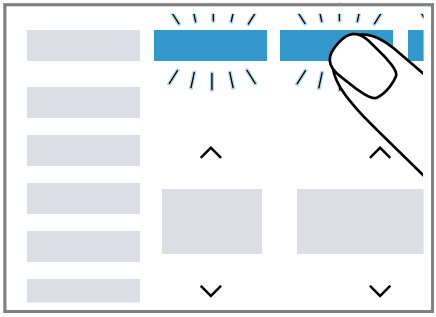

✔ The adjusted buttons light up permanently.

3. To apply the change, briefly press **+ Options**.

✔ The adjusted buttons are permanently shown on the display.

Changing a setting value

If you activate certain settings, the display shows selection buttons and you can change the setting value.

- Press the selection buttons → *Page 24*.

  The display shows the setting value.

6 Before using for the first time

Prepare the appliance for use.

6.1 Starting an empty washing cycle

Your appliance was inspected thoroughly before leaving the factory. To remove any residual water, run the first wash cycle without any laundry.

1. Press ⏻.

   The switch-on process takes a few seconds.
2. Select the **Cottons 90°C** programme or the drum cleaning programme in the Home Connect app.
3. Close the door.
4. Pull out the detergent drawer.
5. Add washing powder that contains a bleaching agent to the manual dosing compartment.

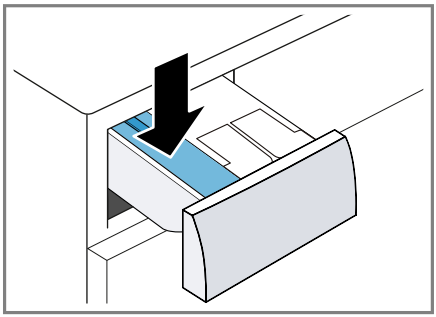

   To prevent foaming, use only half of the amount of detergent recommended by the detergent manufacturer for light soiling. Do not use detergent suitable for woollens or delicates.
6. Push in the detergent drawer.
7. Press ⏸▷ to start the programme.

✔ The display shows the remaining programme duration.

✔ After the programme has ended, the display shows: **End**.

8. Start the first wash cycle or press ⏻ to put the appliance in standby mode.
   → *"Basic operation", Page 32*

7 Display

The display shows the current settings, options or relevant information.

Note: Additional functions may be available as a result of software updates. If a software update is available, you can find further information in the Home Connect app.

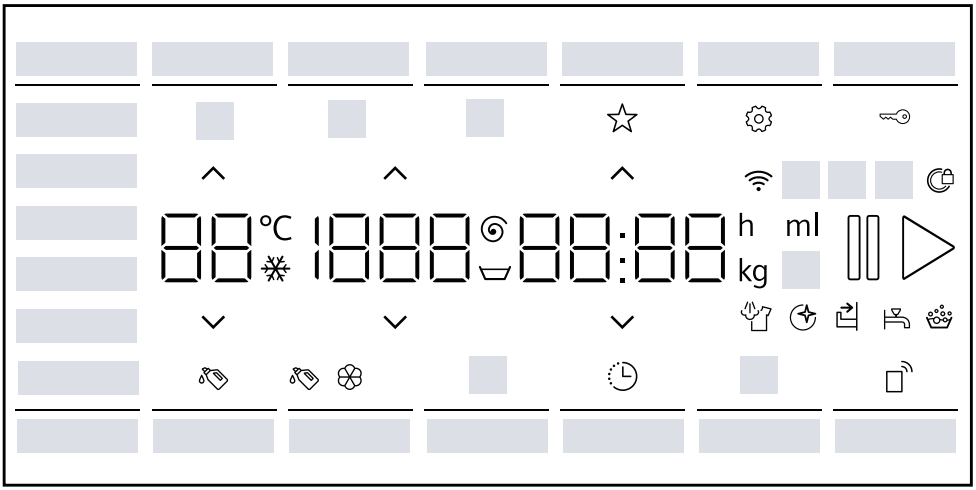

Example: Display

Display	Designation	More information
0:40 [1]	Programme duration/programme time remaining	Expected programme duration or programme time remaining in hours and minutes.
[1]	Programme end time	→ *"Buttons", Page 25*
10.0 [1]	Recommended load	The maximum load capacity for the selected programme in kg.
- 1600	Spin speed	Set spin speed in rpm. → *"Buttons", Page 25* 0: No final spin, only draining : Rinse Hold, no draining
– 90	Temperature	Set temperature in °C. → *"Buttons", Page 25* (cold)
End	End of programme	Programme status

[1] Example

Display	Designation	More information
	Steaming	Programme status
	Saving the programme	Save a programme. → *"Buttons", Page 26*
	Childproof lock	■ lights up: The childproof lock is activated. ■ flashes: The childproof lock is activated and the appliance has been operated. → *"Deactivating the childproof lock", Page 35*
	Prewash	Prewash is activated. → *"Buttons", Page 26*
	Water Plus and Rinse Plus	Wash with more water and a rinse cycle is activated. → *"Buttons", Page 26*
	Shortened programme length	Shortened programme length is activated. → *"Buttons", Page 24*
	Individual items	Washing small loads of washing or individual items of laundry is activated. → *"Buttons", Page 26*
Blood	Blood	The stain type is activated.
Grass	Grass	The stain type is activated.
Red Wine	Red Wine	The stain type is activated.
Sweat	Sweat	The stain type is activated.
Butter/Oil	Grease and oil	The stain type is activated.
Tomatoes	Tomato	The stain type is activated.
	Basic settings	Change the basic settings.
	Reminder to clean the drum	Flashes: Drum is dirty. Run the Cottons 90°C programme for cleaning and caring for the drum and the outer tub. → *"Cleaning the drum", Page 42*
	Remote start	Remote start is activated. → *"Buttons", Page 25*
	Wi-Fi	■ Lights up: The appliance is connected to your home network. ■ Flashes: The appliance is trying to connect to your home network. → *"Home Connect ", Page 37*

[1] Example

Display	Designation	More information
	Dispenser for liquid detergent	■ Lights up: The intelligent dosing system for liquid detergent is activated. ■ Flashes: The fill level of the dispenser is below the minimum level. → *"Intelligent dosing system", Page 35* (liquid detergent)
	Dispenser for liquid detergent or fabric softener.	■ Lights up: The intelligent dosing system for liquid detergent or fabric softener is activated. ■ Flashes: The fill level of the dispenser is below the minimum level. → *"Intelligent dosing system", Page 35* (liquid detergent) (fabric softener)
50 ml [1]	Basic dosage	Basic dosage for detergent or fabric softener. → *"Basic dosage", Page 37*
	Foam detection system	The appliance has detected too much foam.
	Door	■ Lights up: The door is locked. – To add laundry, the door can be unlocked. → *"Adding laundry", Page 34* – To open the door, you can cancel the programme. → *"Cancelling the programme", Page 34* ■ Flashes: The door is not closed.
	Tap	■ No water pressure. ■ The water pressure is too low.
	Detergent drawer	The detergent drawer has not been pushed in fully.
E:35 / -10 [1]	Error	Error code, error display, signal.

[1] Example

8 Buttons

Note: Additional functions may be available as a result of software updates.
If a software update is available, you can find further information in the Home Connect app.

Some buttons are hidden for a reduced display. You can display these additional buttons on the display.
→ *"Displaying or hiding additional buttons", Page 19*
The selection of programme settings depends on the programme that is set.

Button	Selection	More information
⏸ ▷	■ Start ■ Cancel ■ Pause	Start, cancel or pause the programme. If ⏸ is displayed, you can pause the programme. If ▷ is displayed, you can start the programme.
∧ ∨	Multiple selection	To change a setting, press the ∧ or ∨ selection button until the display shows the required setting.
varioSpeed	■ Activate ■ Deactivate	Activate or deactivate a shorter programme duration. **Note:** Energy consumption increases. The washing result is not affected by this.
Stains	Multiple selection	Select the type of stain. The temperature, drum movement and soaking time are all adjusted to suit the type of stain.
i-Dos 1	■ Activate ■ Deactivate ■ Basic dosage	Briefly press the button to activate or deactivate the intelligent dosing system for liquid detergent. Press the button for approx. 3 seconds to set the basic dosage. → *"Intelligent dosing system", Page 35*

Button	Selection	More information
i-Dos 2	■ Activate ■ Deactivate ■ Dispenser contents ■ Basic dosage	Briefly press the button to activate or deactivate the intelligent dosing system for fabric softener ❀ or liquid detergent 🏷. Press the button for approx. 3 seconds to specify the contents of the dispenser or set the basic dosage. → *"Intelligent dosing system", Page 35*
Ready In	Up to 24 hours	Set the programme end time. The programme duration is already included in the set number of hours. Once the programme has started, the programme duration is displayed. **Note:** Press ∧ or ∨ until the display shows the required setting.
∧ ∨	❄ - 90	Adjust the temperature. Set temperature in °C.
∧ ∨	▽ - 1600	Adjust the spin speed or activate ▽ (Rinse Hold). Set spin speed in rpm. If ▽ is selected, the water is not drained at the end of the washing cycle and the spin cycle is deactivated. The laundry remains in the rinsing water.
⏻ (mains switch)	■ Switch on ■ Standby mode	Switch on the appliance or put it in standby mode.
Remote Start	■ Activate ■ Deactivate ■ Open the Home Connect menu	→ *"Remote start", Page 39*
🔑 3 sec.	■ Activate ■ Deactivate	→ *"Childproof lock", Page 35*
Basic Settings	Multiple selection	→ *"Basic settings", Page 41*

Button	Selection	More information
+ Options	■ Displaying or hiding additional buttons ■ Adjusting the display of additional buttons	■ If you briefly press the button, you can display or hide additional buttons. → *"Displaying or hiding additional buttons", Page 19* ■ If you press and hold the button for approx. 3 seconds, you can adjust the display for the additional buttons. → *"Adjusting the display of additional buttons", Page 19*
mini load	■ Activate ■ Deactivate	Wash small loads of delicate or hard-wearing fabrics. The programme running time is shortened, and the water and energy consumption adjusted to the load. **Note:** If you activate the setting, the programme's maximum load capacity is reduced to 0.5 kg.
Prewash	■ Activate ■ Deactivate	Activate or deactivate prewash, e.g. for washing heavily soiled laundry. **Note:** If the intelligent dosing system is activated, the detergent will be dispensed automatically for the prewash and the main wash. If the intelligent dosing system is deactivated, place the detergent for the prewash directly in the drum.
Water & Rinse Plus	■ Activate ■ Deactivate	Activate or deactivate a washing programme with more water and an additional rinse cycle. Recommended for particularly sensitive skin or in regions with very soft water.
Favourite	■ Saving ■ Setting	Press the button for approx. 3 seconds to save your customised program settings. → *"Saving the programme settings", Page 33* If you briefly press the button, you can set customised program settings for your program.

9 Programmes

Notes

- The laundry's care labels provide you with additional information on programme selection.
- Additional functions may be available as a result of software updates. If a software update is available, you can find further information in the Home Connect app.

Programme	Description	Max. load (kg)
Cottons	Wash hard-wearing items made from cotton, linen or blended fabrics. Also suitable as a short programme for normally soiled laundry when you activate varioSpeed. Programme setting: ■ Max. 90 °C ■ Max. 1600 rpm	10.0 5,0[1]
Eco 40-60	Wash items made from cotton, linen or blended fabrics. **Note:** Fabrics which can be washed from 40 °C 40 up to 60 °C 60 as per the care symbol can be washed together. The washing performance corresponds to the best possible washing performance class according to the legal requirements. For this programme, the washing temperature is automatically adjusted depending on the load size, in order to achieve the best possible energy efficiency with the best possible washing result. You cannot change the washing temperature. Programme setting: **Note:** The temperature cannot be adjusted in this programme and is set automatically. ■ Max. - °C ■ Max. 1600 rpm	10.0
Easy Care	Wash items made from synthetic or blended fabrics. Programme setting: ■ Max. 60 °C ■ Max. 1400 rpm	4,0

[1] **varioSpeed** activated
[2] Washing not possible

Programme	Description	Max. load (kg)
Mixed Fabrics	Wash items made from cotton, linen, or synthetic or blended fabrics. Suitable for lightly soiled laundry. Programme setting: ■ Max. 60 °C ■ Max. 1600 rpm	4,0
Delicate/Silk	Wash delicate, washable items made from silk, viscose and synthetic fabrics. Use a detergent that is suitable for delicates or silk. **Note:** Wash especially delicate items or items with hooks, eyelets or clips in a mesh laundry bag. Programme setting: ■ Max. 40 °C ■ Max. 800 rpm	2,0
Wool	Hand- or machine-washable items that are made from wool or contain wool. To prevent the laundry from shrinking, the drum moves the items very gently with long pauses. Use a detergent that is suitable for wool. Programme setting: ■ Max. 40 °C ■ Max. 800 rpm	2,0
powerSpeed 59'	Wash items made from cotton, linen, or synthetic or blended fabrics. Suitable for lightly and normally soiled laundry. Optimum washing results in under an hour. Programme setting: ■ Max. 40 °C ■ Max. 1400 rpm	5,0
Rinse	Rinse and then spin the laundry, and drain the water. Programme setting: Max. 1600 rpm	–
Spin/Drain	Spin and drain the water. If you only want to drain the water, activate 0. The laundry is not spun. Programme setting: Max. 1600 rpm	–
App programs →☰	Select additional programmes directly via the Home Connect app. A description of the programmes can be found in the Home Connect app.	–

[1] **varioSpeed** activated
[2] Washing not possible

Programme	Description	Max. load (kg)
	Note: Your appliance must be connected to your home network and registered in your Home Connect app. → *"Home Connect ", Page 37*	
Outdoor Waterproofing	Wash all-weather and outdoor clothing with membrane technology and water-resistant equipment. Suitable for washing and then waterproofing. Use a detergent for outdoor fabrics. Use a waterproofing agent that is suitable for machine-washing. Do not use fabric softener. Place the detergent for outdoor fabrics in the manual dosing compartment. If the programme stops before the last rinse cycle, add the waterproofing agent to the manual dosing compartment. Press II ▷ to resume the programme. → *"Detergent drawer", Page 17* After-treat the laundry in accordance with the manufacturer's instructions. Programme setting: ■ Max. 40 °C ■ Max. 800 rpm	1,0
smartFinish	Suitable for shirts, T-shirts and similar fabrics made from cotton, linen or blended fabrics. Programme for warming and steaming dry items using steam in order to hang them up once the programme has ended or to make them easier to iron. The programme's maximum load is five shirts or five t-shirts. Activate varioSpeed if you only want to steam one item of laundry. **Notes** ■ Immediately after the programme ends, hang up the warm, steamed items or iron them. ■ The laundry is not washed or cleaned. Do not use any detergent or cleaning products. ■ The steam is hot and may cause damage to certain fabrics or fabric types.	- [2]

[1] **varioSpeed** activated
[2] Washing not possible

Programme	Description	Max. load (kg)
	The programme is therefore not suitable for outdoor clothing or items made from silk or wool, such as jumpers.	
Auto	Wash hard-wearing items made from cotton, or synthetic or blended fabrics. The degree of soiling and the type of fabric are automatically detected. The washing process is adapted. **Note:** The temperature and spin speed cannot be adjusted in this programme and are set automatically. The maximum temperature is 40 °C. The maximum spin speed is 1400 rpm.	6,0
Rapid 15'/30'	Wash items made from cotton, or synthetic or blended fabrics. Short programme for small items of lightly soiled laundry. The programme duration is approx. 30 minutes. If you wish to reduce the programme duration to 15 minutes, activate varioSpeed. The maximum load is reduced to 2,0 kg. Programme setting: ■ Max. 40 °C ■ Max. 1200 rpm	4,0

[1] **varioSpeed** activated
[2] Washing not possible

10 Accessories

Use original accessories. These have been made especially for your appliance.

Note: Some accessories are available in other colours. Contact
→ *"Customer Service", Page 61*.

	Use	Order number
Water inlet hose extension	Extend the water inlet hose for cold water or AquaStop (approx. 2.50 m).	WZ10131
Fixing brackets	Improves the stability of the appliance.	WX975600
Platform	Install the appliance at a raised height so that it can be easily loaded and unloaded.	WZWP20W

11 Laundry

11.1 Preparing the laundry

ATTENTION!
Objects remaining in the laundry may damage the laundry and the drum.
- ▸ Remove all items from any pockets in your laundry before using the appliance.

Note
The appliance and fabrics are protected when you prepare your laundry.
- Brush off sand and soil
- Sort the laundry according to colour and textiles and observe the care labels
- Close all zips, Velcro fasteners, hooks and eyes
- Tie cloth belts, cloth straps and cords together
- Remove curtain fittings and lead strips
- Wash small or particularly delicate items in a mesh washing bag
- Wash large and small items of laundry together
- Wash laundry with fresh stains immediately
- Pretreat laundry with dried stains and wash several times
- Load the laundry unfolded into the drum

12 Detergents and care products

The manufacturer's instructions for use and dosage can be found on the packaging.

Notes
- When using liquid detergents, only use liquid detergents that are self-flowing

- Do not mix different liquid detergents
- Do not mix detergent and fabric softener
- Do not use products that have expired or are highly congealed
- do not use products containing solvents, caustic agents or volatile substances
- Use dyes sparingly as salt may damage stainless steel
- Do not use color-bleaching agents in the appliance
- Do not pour vinegar into the dispensers → *Page 36* of the intelligent dosing system

13 Basic operation

13.1 Switching on the appliance

Note: If you switch the appliance on the first time after you have connected it to the electrical system, the switch-on process takes up to one minute.

Requirement: The appliance has been correctly installed and connected.
→ *"Installation and connection", Page 12*

- ▸ Press ⏻.

  The switch-on process takes a few seconds.
- ✔ An audible function test is carried out.

Note: The lighting for the drum goes out automatically.

13.2 Setting a programme

1. Turn the programme selector and set the required programme.
   → *"Programmes", Page 27*
2. If required, adjust the programme settings.
   → *"Adjusting the programme settings", Page 32*

Setting additional programmes

Requirement: Home Connect is set up.
→ *"Setting up Home Connect", Page 38*

1. Set the **App programs** →☰ programme.

   If **Remote Start** flashes,
2. Press **Remote Start**.

   The Home Connect app displays the programmes that can be selected.
3. Set a programme in the Home Connect app.
4. If required, adjust the programme settings.
   → *"Adjusting the programme settings", Page 32*
5. Start the programme.
   → *"Starting the programme", Page 33*

13.3 Adjusting the programme settings

Requirement: A programme has been set.
→ *"Setting a programme", Page 32*

- ▸ Adjust the programme settings.
  → *"Buttons", Page 24*

  Observe the information about operating logic → *Page 18*.

Notes

- The programme settings are not saved permanently for the programme.

- The setting is saved if you activate or deactivate the intelligent dosing system.

13.4 Saving the programme settings

You can save your individual programme settings as favourites.

Requirements
- A programme is set.
  → *"Setting a programme", Page 32*
- The programme settings have been adjusted.
  → *"Adjusting the programme settings", Page 32*

▸ Press and hold **Favourite** for approx. 3 seconds.

Press **Favourite** to call up the saved programme.

Note: To overwrite the saved programme, repeat the steps above.

13.5 Loading laundry

Note: To prevent creasing, note the maximum load for the programmes.
→ *"Programmes", Page 27*

Requirements
- The laundry is prepared and sorted.
  → *"Laundry", Page 31*
- The drum is empty.

1. Open the door.
2. Place the laundry in the drum.
3. Close the door.

   Ensure that there is no laundry trapped in the door.

13.6 Adding detergent and care product

For programmes in which intelligent dosing is not possible or desirable, you can add detergent manually.

Tip: In addition to intelligent dosing, you can also add additional care product for laundry, e.g. stain remover, starch or bleach, to the manual dosing compartment. Do not add any additional detergent to the manual dosing compartment to avoid overdosage and/or foaming.

Note: Observe the information about detergents and care products
→ *Page 31*.

1. Pull out the detergent drawer.
2. Pour in detergent.
   → *"Detergent drawer", Page 17*
3. If required, add the care product.
4. Push in the detergent drawer.

13.7 Starting the programme

Requirement: A programme is set.
→ *"Setting a programme", Page 32*

▸ Press ⏸▷.

✔ The drum rotates and load detection takes place. This can take up to 2 minutes, after which water enters the drum.
✔ The display shows the programme duration or the programme end time.
✔ After the programme has ended, the display shows: **End**.

13.8 Soaking laundry

Note: No additional detergent is required. The washing solution is then used for washing.

1. Start the programme.
2. To pause the programme, after approx. 10 minutes, press ⏸▷.

3. To resume the programme, after the desired soaking time, press ⏸ ▷.

13.9 Adding laundry

After the programme starts, you can remove or add laundry depending on the programme status.

1. Press ⏸ ▷.

   The appliance pauses.

   Note: If you want to add laundry, follow the instructions on the display.
   → *"Display", Page 23*
2. Open the door.
3. Add or remove laundry.
4. Close the door.
5. Press ⏸ ▷.

13.10 Cancelling the programme

1. Press ⏸ ▷.
2. Open the door.

   The appliance door remains locked for safety reasons if the temperature and water levels are high.
   - If the temperature is high, start the **Rinse** programme.
   - If the water level is high, start the **Spin** programme or select a suitable programme for draining.
     → *"Programmes", Page 27*
3. Remove the laundry.
   → *"Unloading the laundry", Page 34*

13.11 Resuming the programme when the programme status is Rinse Hold

Requirements

- Rinse Stop is activated.
  → *"Buttons", Page 25*
- The last rinse cycle of the set programme has ended and the laundry is in the rinsing water.

1. Set the **Spin** programme or a programme for draining the water.
   → *"Programmes", Page 27*
2. Press ⏸ ▷.

13.12 Unloading the laundry

1. Open the door.
2. Remove the laundry from the drum.

13.13 Put the appliance into standby mode

1. Press ⏻.
2. Wipe the rubber gasket dry and remove any foreign objects.

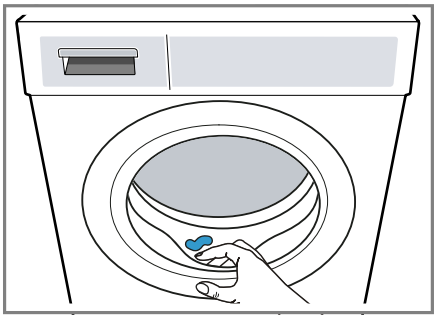

3. Leave the appliance door and detergent drawer open so that residual water can evaporate.

14 Childproof lock

Secure your appliance against being operated unintentionally using the controls.

14.1 Activating the childproof lock

- Press and hold **3 sec.** for approx. 3 seconds.
- ✔ The display shows .
- ✔ The control elements are locked.
- ✔ The childproof lock also remains activated when the appliance is in standby mode and in the event of a power cut.

14.2 Deactivating the childproof lock

Requirement: To deactivate the childproof lock, the appliance must be switched on.

- Press and hold **3 sec.** for approx. 3 seconds.

  So that the programme currently running is not cancelled, the programme selector must be set to the initial programme.
- ✔ goes out in the display.

15 Intelligent dosing system

The optimum quantities of liquid detergent and fabric softener are dispensed automatically depending on the programme and settings.

15.1 Starting the programme with intelligent dosing system

If you do not want to dose liquid detergent and fabric softener manually, use the intelligent dosing system. This function is available depending on the selected programme and is activated automatically.

Note
If you are using the intelligent dosing system, do not add additional detergent or fabric softener into the compartment for manual dosing.
→ *"Adding detergent and care product", Page 33*
If you want to dose manually for a set programme, observe the following information:

- Deactivate the intelligent dosing system before starting the programme. The settings also remain saved when the appliance is in standby mode.
  → *"Buttons", Page 24*
  → *"Buttons", Page 25*
- Pour detergent or fabric softener into the compartment for manual dosing.
  → *"Adding detergent and care product", Page 33*
- Activate the intelligent dosing system once the programme has ended.
  → *"Buttons", Page 24*
  → *"Buttons", Page 25*

Requirements

- The laundry is prepared.
  → *"Preparing the laundry", Page 31*
- The laundry is sorted.
- The laundry is placed in the appliance.
  → *"Loading laundry", Page 33*
- The programme is set.
  → *"Setting a programme", Page 32*
- The intelligent dosing system is activated.
  → *"Buttons", Page 24*
  → *"Display", Page 23*
  → *"Display", Page 23*

1. Fill the dispensers.
   → *"Filling the dispensers", Page 36*

   To replace the contents of the dispenser with another product, clean the detergent drawer.
   → *"Cleaning the detergent drawer", Page 43*
2. If required, adjust the contents of the dispenser → *Page 37*.
3. If required, adjust the basic dosage → *Page 37*.
4. If required, adjust the programme settings.
   → *"Adjusting the programme settings", Page 32*
5. Start the programme.
   → *"Starting the programme", Page 33*
6. Remove the laundry.
   → *"Unloading the laundry", Page 34*

15.2 Filling the dispensers

If you want to use the intelligent dosing system or if the appliance displays a notification during operation of the appliance, fill the dispensers.

Note: Fill the dispensers only with suitable detergent and care products → *Page 31*.
If you want to add more liquid detergent or fabric softener in the dispenser, use the same product.
If you want to replace the liquid detergent or fabric softener in the dispenser with another product, clean the detergent drawer beforehand.
→ *"Cleaning the detergent drawer", Page 43*
If you want to use both dispensers for liquid detergent, adjust the contents of the dispensers → *Page 37*.

Requirement: The display shows a notification to fill the dispenser.
→ *"Display", Page 23*
→ *"Display", Page 23*

1. Pull out the detergent drawer.
2. Open the dispenser cover.

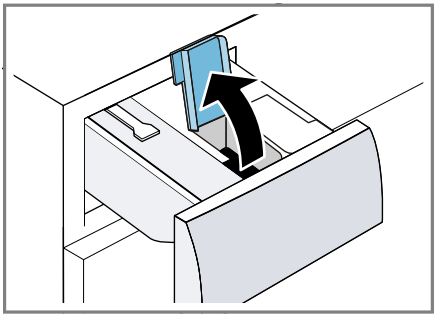

3. Pour liquid detergent and fabric softener into the relevant dispensers.
→ *"Detergent drawer", Page 17*

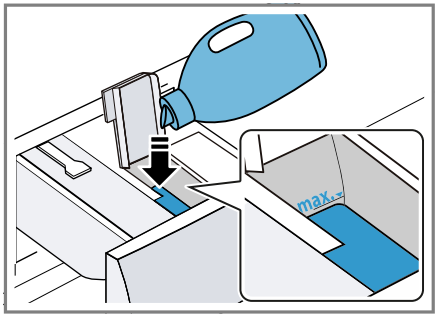

Do not exceed the marking for the maximum fill level when filling.
4. Close the dispenser cover.

Note: To prevent the liquid detergent or fabric softener from drying out, close the dispenser cover immediately after filling.
5. If required, pour washing aid into the compartment for manual dosing.
→ *"Adding detergent and care product", Page 33*
6. Push in the detergent drawer.
7. Adjust the basic dosage
→ *Page 37*.

15.3 Dispenser contents

Notes

- If you change the contents of the dispenser, the basic dosage for this dispenser is reset.
- If you use both dispensers for liquid detergent, you must select a dispenser which is to be used during washing.

Adjusting the dispenser contents

1. Press and hold **i-Dos 2** for approx. 3 seconds.
2. To set , press **i-Dos 2**.
✔ The display shows .
3. To set , press **i-Dos 2** again.
4. To end the setting process, wait briefly.

15.4 Basic dosage

The basic dosage depends on the manufacturer's instructions for the detergent, the water hardness and the degree of soiling of the laundry. Always set a basic dosage that corresponds to the dosage for a standard load of 4.5 kg.

Adjusting the basic dosage

1. Press and hold **i-Dos 1** for approx. 3 seconds.
✔ The display shows the basic dosage set for .
2. To adjust the setting, press ∧ / ∨ .
3. To end the setting process, wait briefly.

Note: To adjust the basic dosage for , repeat the steps with **i-Dos 2**.

16 Home Connect

This appliance is network-capable. Connecting your appliance to a mobile device lets you control its functions via the Home Connect app, adjust its basic settings and monitor its operating status.
The Home Connect services are not available in every country. The availability of the Home Connect function depends on the availability of Home Connect services in your country. You can find information about this at: www.home-connect.com.

The Home Connect app guides you through the entire login process. Follow the instructions in the Home Connect app to configure the settings.

Tips

- Please consult the documents supplied by Home Connect.
- Please also follow the instructions in the Home Connect app.

Notes

- Please note the safety precautions in this instruction manual and make sure that they are also observed when operating the appliance via the Home Connect app. → *"Safety", Page 4*
- Operating the appliance on the appliance itself always takes priority. During this time it is not possible to operate the appliance using the Home Connect app.

16.1 Setting up the Home Connect app

1. Install the Home Connect app on your mobile device.

[1]

2. Start the Home Connect app and set up access for Home Connect.

   The Home Connect app guides you through the entire login process.

16.2 Setting up Home Connect

Requirements

- The Home Connect app has been installed on your mobile device.
- Wi-Fi has been activated on the router.
- The appliance is receiving signals from the WLAN home network (Wi-Fi) at its installation location.

1. Press and hold **Remote Start** for approx. 3 seconds.
2. Follow the instructions in the Home Connect app.

16.3 Home Connect menu

The Home Connect menu contains all of the Home Connect settings.

Calling up the Home Connect menu

- Press and hold **Remote Start** for at least 3 seconds.
- ✔ The display shows the first setting of the Home Connect menu.

Navigating in the Home Connect menu

- Briefly press **Remote Start** until the display shows the required setting.

Exiting the Home Connect menu

- Press and hold **Remote Start** for at least 3 seconds.

[1] Apple App Store und the Apple App Store logo are trademarks of Apple Inc. Google Play and the Google Play logo are trademarks of Google LLC.

16.4 Activating Wi-Fi on the appliance

Requirements

- The Home Connect menu is called up.
  → *"Calling up the Home Connect menu", Page 38*
- The display shows **oFF**.

▸ Press ⏯ ▷ to change the setting.

✔ The display shows **on** if the Wi-Fi is activated.

Note: If the Wi-Fi is activated, the display alternately shows **on** and the signal strength of the Wi-Fi connection.

16.5 Deactivating Wi-Fi on the appliance

Requirements

- The Home Connect menu is called up.
  → *"Calling up the Home Connect menu", Page 38*
- The display shows **on**.

▸ Press ⏯ ▷ to change the setting.

✔ The display shows **oFF** if the Wi-Fi is deactivated.

16.6 Resetting the appliance network settings

Requirements

- The Home Connect menu is called up.
  → *"Calling up the Home Connect menu", Page 38*
- The display shows **rEs**.

▸ Press and hold ⏯ ▷ for at least 3 seconds.

✔ The network settings are reset.

16.7 Remote start

Enable the appliance for remote start via the Home Connect app.

Note

Remote start is deactivated for safety reasons in the following circumstances:

- The appliance door is opened.
- **Remote Start** is pressed.
- Following a power cut.

Activating remote start

Requirements

- The appliance is connected to your home WiFi network.
- The appliance is connected to the Home Connect app.
- A programme is selected.
- The appliance door is closed.
- The detergent drawer has been pushed in.

Deactivating remote start

▸ Press **Remote Start**.

✔ **Remote Start** goes out.

16.8 Remote diagnostics

Customer Service can use Remote Diagnostics to access your appliance if you contact them, have your appliance connected to the Home Connect server and if Remote Diagnostics is available in the country in which you are using the appliance.

Tip: For further information and details about the availability of Remote Diagnostics in your country, please visit the service/support section of your local website: www.home-connect.com.

16.9 Data protection

Please see the information on data protection.
The first time your appliance is registered on a home network connected to the Internet, your appliance will transmit the following types of data to the Home Connect server (initial registration):

- Unique appliance identification (consisting of appliance codes as well as the MAC address of the Wi-Fi communication module installed).
- Security certificate of the Wi-Fi communication module (to ensure a secure data connection).
- The current software and hardware version of your appliance.
- Status of any previous reset to factory settings.

This initial registration prepares the Home Connect functions for use and is only required when you want to use the Home Connect functions for the first time.

Note: Please note that the Home Connect functions can only be utilised with the Home Connect app. Information on data protection can be retrieved in the Home Connect app.

17 Basic settings

You can configure the basic settings for your appliance to meet your needs.

17.1 Overview of the basic settings

Note: Additional functions may be available as a result of software updates. If a software update is available, you can find further information in the Home Connect app.

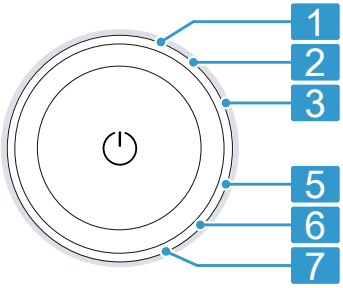

Position	Basic setting	Selection	Description
1	End signal	0 (off) 1 (quiet) 2 (medium) 3 (loud) 4 (very loud)	Set the volume of the signal at the end of the programme.
2	Button signal	0 (off) 1 (quiet) 2 (medium) 3 (loud) 4 (very loud)	Set the volume of the audible signal emitted when the buttons are pressed.
3	Display brightness	1 (low) 2 (medium) 3 (high) 4 (very high)	Set the display brightness.
5	Drum cleaning reminder	On OFF	Activate or deactivate the reminder to clean the drum.
6	Programme counter		Display the number of finished programmes.
7	Factory settings	rES	Restore the appliance to the factory settings.

17.2 Changing the basic settings

Requirement: The display shows all additional buttons.
→ *"Displaying or hiding additional buttons", Page 19*

1. To call up the basic settings, press **Basic Settings**.
2. Select the required basic setting.
   → *"Overview of the basic settings", Page 41*
3. To change the value, press ∧ or ∨.
4. To reset the appliance to the factory settings, press and hold ⏸▷ for approx. 3 seconds.
5. Press **Basic Settings** to save the settings.

18 Programme counter

The program counter displays the number of finished programmes.

18.1 Calling up the programme counter

1. Press **Basic Settings**.
2. Set the programme to position 6.

19 Cleaning and servicing

To keep your appliance working efficiently for a long time, it is important to clean and maintain it carefully.

19.1 Cleaning the drum

⚠ **CAUTION**
Risk of injury!
Permanently washing at low temperatures and a lack of ventilation for the appliance may damage the drum and cause injury.

- Regularly run a programme for cleaning the drum or wash at temperatures of at least 60 °C.
- Leave the appliance to dry after every operation with the door open, and leave the detergent drawer to dry.

- Select the **Cottons 90°C** programme or the drum cleaning programme in the Home Connect app.

  Run the programme without laundry and with a cleaning agent for caring for the inside of the appliance or with washing powder that contains bleach.

19.2 Cleaning the detergent drawer

If you want to replace the liquid detergent or fabric softener in the dispenser with another product or if the detergent drawer is dirty, clean the detergent dispenser.

ATTENTION!
The pump unit contains electrical components. Electrical components may be damaged if they come into contact with liquids.

- Do not clean the pump unit in the dishwasher and do not immerse it in water.
- Protect the electrical connection on the rear against water, detergent and fabric softener residue.

1. Put the appliance into standby mode.
   → *"Put the appliance into standby mode", Page 34*
2. Pull out the detergent drawer.
3. Press down on the insert and remove the detergent drawer.

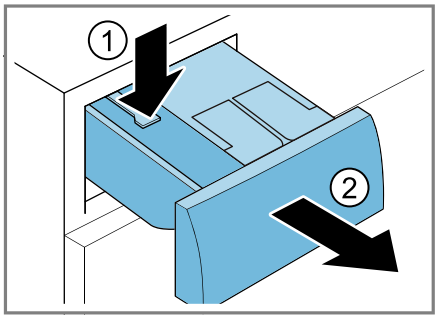

4. Remove the pump unit.

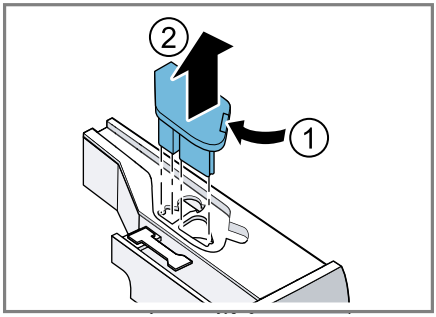

5. Unclip the detergent drawer cover and remove it.

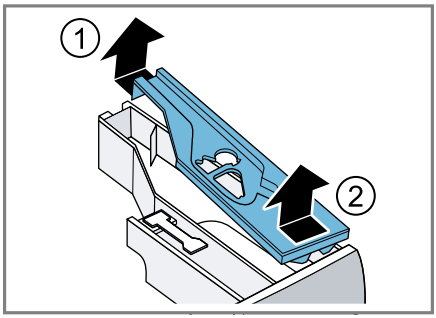

6. Empty the detergent drawer.

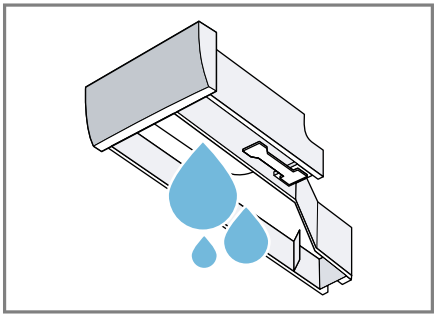

7. Clean the pump unit with a damp cloth.

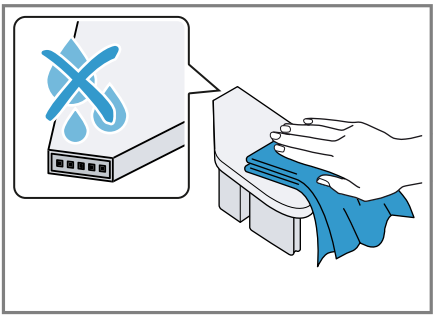

8. Clean the detergent drawer and the cover with a soft, damp cloth or hand shower.

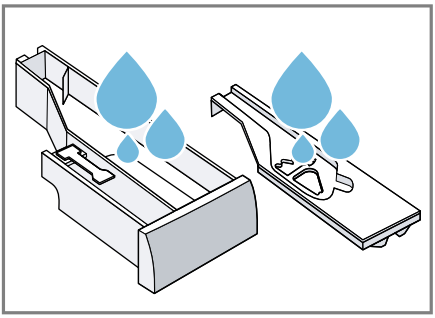

9. Dry the detergent drawer, cover and pump unit and reinsert them.

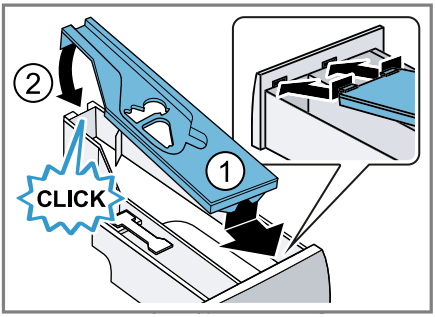

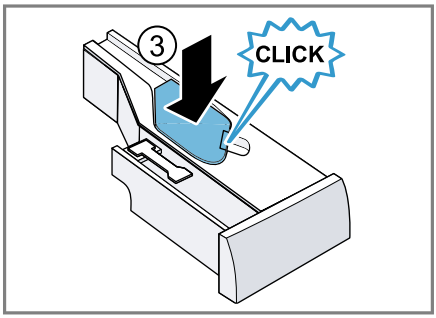

10. Clean the housing of the detergent drawer in the appliance.

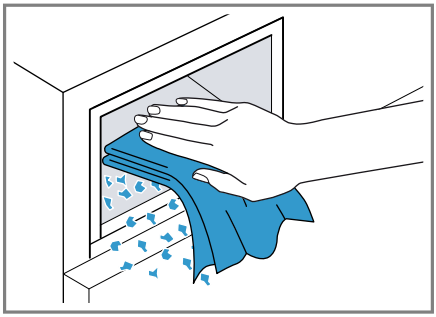

11. Push in the detergent drawer.

19.3 Cleaning the drain pump

Clean the drain pump regularly, at least once a year, as well as in the event of faults, e.g. blockages or rattling noises.

Emptying the drain pump

1. Turn off the tap.
2. Put the appliance into standby mode.
   → *"Put the appliance into standby mode", Page 34*
3. Disconnect the appliance's mains plug from the power supply.

4. Open and remove the service flap.

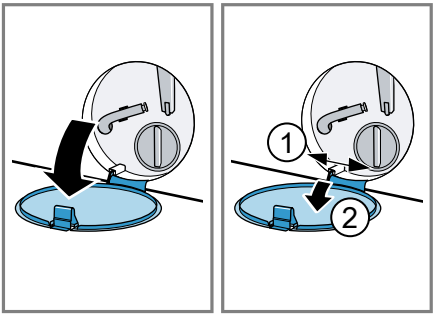

5. Slide a sufficiently large container under the opening.

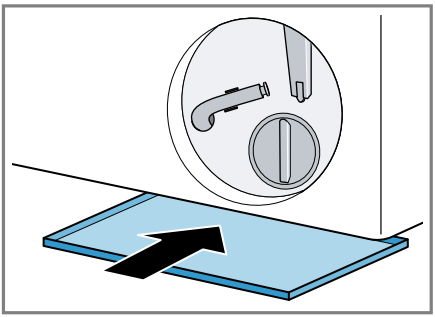

6. Take the drain hose out of the holder.

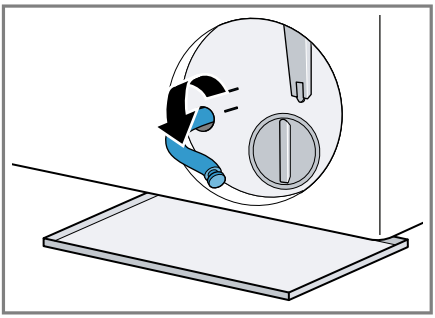

7. ⚠ **CAUTION - Risk of scalding!**
When you wash at high temperatures, the detergent solution gets hot.
- Do not touch the hot detergent solution.

To allow the detergent solution to flow out into the container, remove the sealing cap.

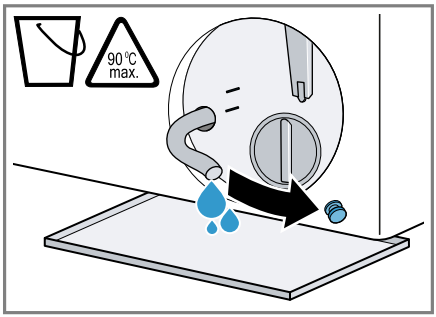

8. Firmly press on the sealing cap.

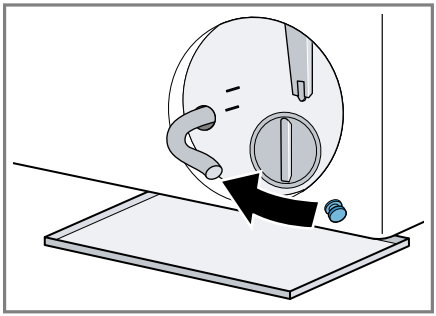

9. Insert the drain hose into the holder.

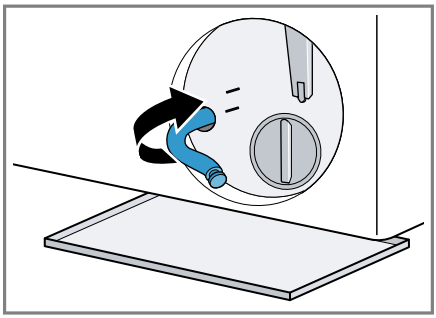

Cleaning the drain pump

Requirement: The drain pump is empty. → *Page 44*

1. Since water may remain in the drain pump, unscrew the pump cap carefully.
   – The filter insert in the pump housing may become stuck due to coarse particles of dirt. Loosen the dirt and remove the filter insert.

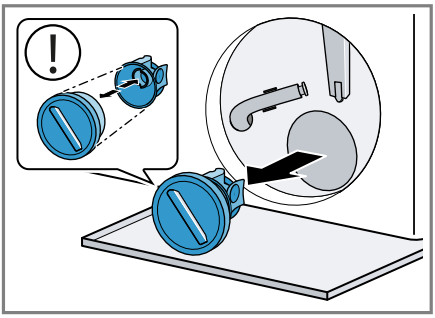

2. Clean the interior, the thread on the pump cap and the pump housing.

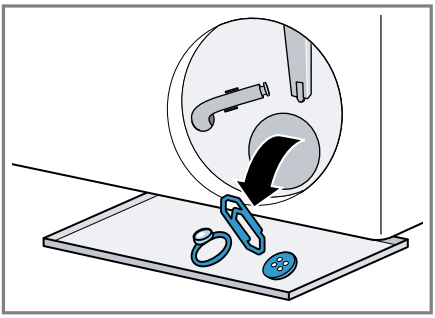

The pump cap is comprised of two parts which can be taken apart for cleaning.

3. Ensure that both impellers can turn.

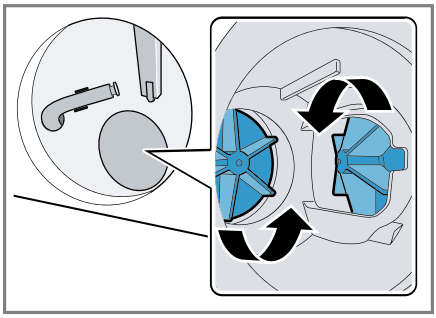

4. Insert the pump cap.
   – Ensure that the parts of the pump cap are correctly assembled.

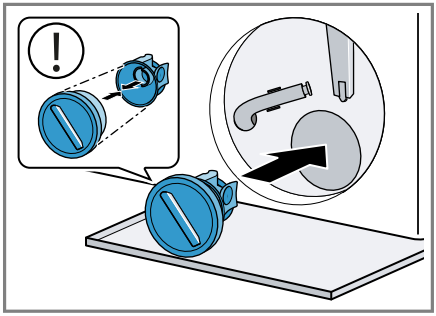

5. Screw the pump cap as far as it will go.

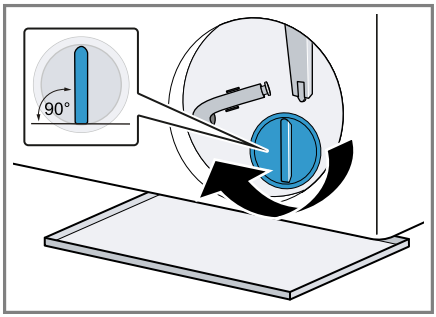

The handle on the pump cap must be in a vertical position.

6. Insert and close the service flap.

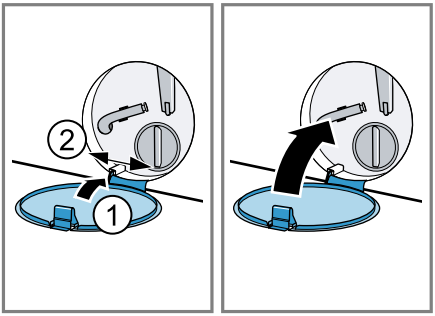

19.4 Cleaning the intake opening in the rubber gasket

Regularly check the intake opening in the rubber gasket for any blockages and clean the intake opening.

1. Open the appliance door.
2. Remove any blockages from the intake opening.

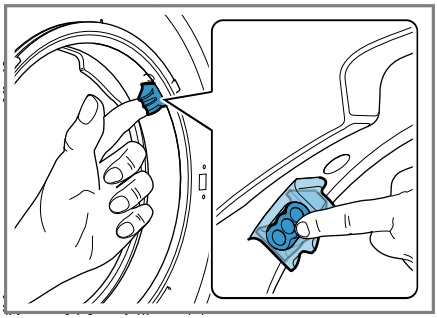

Note: Do not use any sharp or pointed objects.

20 Troubleshooting

You can rectify minor faults on your appliance yourself. Read the troubleshooting information before contacting after-sales service. This will avoid unnecessary costs.

⚠ **WARNING**
Risk of electric shock!
Incorrect repairs are dangerous.
- Repairs to the appliance should only be carried out by trained specialist staff.
- Only use genuine spare parts when repairing the appliance.
- If the power cord of this appliance is damaged, it must be replaced by the manufacturer, the manufacturer's Customer Service or a similarly qualified person in order to prevent any risk.

Fault	Cause and troubleshooting
The display goes out and ▯▯ ▷ flashes.	Energy-saving mode is active ▸ Press ▯▯ ▷. ✔ The symbol lights up again.
"E:30 / -80"	Drain pipe or water outlet hose is blocked. ▸ Clean the drain pipe and the water outlet hose.
	Drain pipe or water drain hose is caught or jammed. ▸ Ensure that the drain pipe and water drain hose are not kinked or trapped.
	The water outlet hose is connected too high. ▸ Install the water outlet hose at a maximum height of 1 metre.
	Unapproved extension installed on the water drain hose. ▸ Remove any unapproved extensions from the water hose. → *"Connecting the appliance", Page 14*
	Drain pump is blocked. ▸ → *"Cleaning the drain pump", Page 44*
	Pump cover is not correctly assembled. ▸ Correctly assemble the pump cover.
	The pump cap is not fully screwed in. ▸ Ensure that the pump cap is screwed in all the way into the appliance. The handle on the pump cap must be in a vertical position.
	Detergent dosage is too high.

Fault	Cause and troubleshooting
"E:30 / -80"	▸ Immediate measure: Mix one tablespoon of fabric softener with 0.5 litres of water and pour the mixture into the compartment for manual dosing (not for outdoor clothing, sportswear or items stuffed with down). ▸ If intelligent dosing is activated, reduce the basic dosage → *Page 37*. ▸ If you dose manually, reduce the amount of detergent for the next washing cycle with the same load.
"E:38 / -25 / -26"	Drain pump is blocked. ▸ → *"Cleaning the drum", Page 42* if the fault is displayed again, ▸ → *"Cleaning the drain pump", Page 44*
	Inlet opening of the rubber gasket is blocked. ▸ → *"Cleaning the intake opening in the rubber gasket", Page 47*
"E:10 / -00 / -10 / -20"	The pump for the intelligent dosing system is blocked. **1.** Switch off the appliance. **2.** Clean the pump unit. → *"Cleaning the detergent drawer", Page 43* **3.** Switch the appliance on. **4.** If the display appears again after you clean the pump unit, call customer service. → *"Customer Service", Page 61* **Note:** You can deactivate and manually dose the intelligent dosing system until the fault is rectified. → *"Buttons", Page 24*
"H:32"	The unbalanced load detection system has interrupted the spin cycle because the laundry is unevenly distributed. ▸ Redistribute the laundry in the drum. **Note:** Where possible, mix large and small items in the drum. Different sized items of laundry distribute themselves better during the spin cycle.
"E:30 / -10" and/or 🚰	The water pressure is low. No remedial action possible.
	The filter in the water inflow is blocked. ▸ Clean the water inflow filter.
	The tap is turned off. ▸ Turn on the tap.

Fault	Cause and troubleshooting
"E:30 / -10" and/or	The water inlet hose is kinked or jammed. ▸ Ensure that the water inlet hose is not kinked or jammed.
	Water level measurement system is defective. **Note:** With the error message, the appliance starts a draining process. 1. First wait approx. 5 minutes until the drain process ends. 2. To reset the error message, switch the appliance off. 3. Switch the appliance back on. 4. If the error message is displayed again, call customer service. → *"Customer Service", Page 61*
"E:35 / -10"	There is water in the base trough. ▸ Turn off the water tap. ▸ Call the after-sales service. → *"Customer Service", Page 61*
	The appliance is leaking. ▸ Turn off the water tap. ▸ Call the after-sales service. → *"Customer Service", Page 61*
	The detergent drawer has not been pushed in fully. ▸ Push in the detergent drawer until the symbol goes out.
	The pump unit is not inserted. 1. Insert the pump unit into the detergent drawer. → *"Cleaning the detergent drawer", Page 43* 2. Push in the detergent drawer until the symbol goes out.
	Detergent dosage is too high. ▸ Immediate measure: Mix one tablespoon of fabric softener with 0.5 litres of water and pour the mixture into the compartment for manual dosing (not for outdoor clothing, sportswear or items stuffed with down). ▸ If intelligent dosing is activated, reduce the basic dosage → *Page 37*. ▸ If you dose manually, reduce the amount of detergent for the next washing cycle with the same load.

Fault	Cause and troubleshooting
"E:30/-20"	Detergent dosage is too high. ▸ If you dose manually, reduce the amount of detergent for the next washing cycle with the same load.
	Additional water is added. ▸ Do not add any extra water to the appliance while it is operating.
	Solenoid valve defective. ▸ Call the after-sales service. → *"Customer Service", Page 61*
All other error codes.	Malfunction **1.** Switch the appliance off and then on again. **2.** If the message appears again, disconnect the appliance from the power supply for at least 30 seconds by pulling out the plug or by switching off the relevant circuit breaker in the fuse box. ✔ If the fault was a one-off, the message disappears. **3.** If the message appears again, call the after-sales service. Please specify the exact error message when calling. → *"Customer Service", Page 61*
The appliance is not working.	The mains plug of the power cord is not plugged in. ▸ Connect the appliance to the power supply.
	The circuit breaker in the fuse box has tripped. ▸ Check the circuit breaker in the fuse box.
	There has been a power cut. ▸ Check whether the lighting in your kitchen or other appliances are working.
The programme does not start.	You have not pressed ▯▯ ▷. ▸ Press ▯▯ ▷.
	Door is not closed. ▸ Close the door.
	Childproof lock is activated. ▸ Deactivate childproof lock. → *"Deactivating the childproof lock", Page 35*
	Ready In is activated. ▸ Check whether **Ready In** is activated. → *"Buttons", Page 25*
	Laundry is caught in the door. ▸ Remove any trapped laundry.
	The detergent drawer has not been pushed in fully.

Fault	Cause and troubleshooting
The programme does not start.	▸ Push in the detergent drawer until the symbol goes out.
	The pump for the intelligent dosing system is blocked. 1. Switch off the appliance. 2. Clean the pump unit. → *"Cleaning the detergent drawer", Page 43* 3. Switch the appliance on. 4. If the display appears again after you clean the pump unit, call customer service. → *"Customer Service", Page 61* **Note:** You can deactivate and manually dose the intelligent dosing system until the fault is rectified. → *"Buttons", Page 24*
The door cannot be opened.	is activated. ▸ Continue the programme by selecting **Spin** or **Drain** and pressing ▷. → *"Resuming the programme when the programme status is Rinse Hold", Page 34*
	The temperature is too high. ▸ Wait until the temperature has dropped. ▸ Cancel the programme. → *"Cancelling the programme", Page 34*
	Water level is too high. ▸ Select a suitable programme for draining. → *"Programmes", Page 27*
	Power failure. ▸ Open the door using the emergency release. → *"Emergency release", Page 60*
The water is not draining.	Drain pipe or water outlet hose is blocked. ▸ Clean the drain pipe and the water outlet hose.
	Drain pipe or water drain hose is caught or jammed. ▸ Ensure that the drain pipe and water drain hose are not kinked or trapped.
	Drain pump is blocked. ▸ → *"Cleaning the drain pump", Page 44*
	is activated. ▸ Continue the programme by selecting **Spin** or **Drain** and pressing ▷. → *"Resuming the programme when the programme status is Rinse Hold", Page 34*

Fault	Cause and troubleshooting
The water is not draining.	The water outlet hose is connected too high. ▸ Install the water outlet hose at a maximum height of 1 metre.
	Pump cover is not correctly assembled. ▸ Correctly assemble the pump cover.
	Detergent dosage is too high. ▸ Immediate measure: Mix one tablespoon of fabric softener with 0.5 litres of water and pour the mixture into the compartment for manual dosing (not for outdoor clothing, sportswear or items stuffed with down). ▸ If intelligent dosing is activated, reduce the basic dosage → *Page 37*. ▸ If you dose manually, reduce the amount of detergent for the next washing cycle with the same load.
	Unapproved extension installed on the water drain hose. ▸ Remove any unapproved extensions from the water hose. → *"Connecting the appliance", Page 14*
	The pump cap is not fully screwed in. ▸ Ensure that the pump cap is screwed in all the way into the appliance. The handle on the pump cap must be in a vertical position.
Water is not flowing in. Detergent is not being dispensed.	You have not pressed ⏸▷. ▸ Press ⏸▷.
	The filter in the water inflow is blocked. ▸ Clean the water inflow filter.
	The tap is turned off. ▸ Turn on the tap.
	The water inlet hose is kinked or jammed. ▸ Ensure that the water inlet hose is not kinked or jammed.
The spin cycle runs several times.	The unbalanced load detection system eliminates an imbalance by repeatedly redistributing the laundry. ▸ Not a fault – no action required. **Note:** When loading, where possible, place large and small items of laundry together in the drum. Different sized items of laundry distribute themselves better during the spin cycle.

Fault	Cause and troubleshooting
The programme duration changes during the wash cycle.	The programme operation is optimised electronically. This may change the programme duration. ▸ Not a fault – no action required.
	The unbalanced load detection system eliminates an imbalance by repeatedly redistributing the laundry. ▸ Not a fault – no action required. **Note:** When loading, where possible, place large and small items of laundry together in the drum. Different sized items of laundry distribute themselves better during the spin cycle.
	Foam detection system switches on a rinse cycle if foam build-up is too high. ▸ Not a fault – no action required.
No water is visible in the drum.	Water is below the visible area. ▸ Not a fault – no action required. ▸ Do not add any extra water to the appliance while it is operating.
Drum jerks after the programme starts.	This is caused by an internal motor test. ▸ Not a fault – no action required.
Vibrations and movement of the appliance whilst spinning.	Appliance is not correctly aligned. ▸ → *"Aligning the appliance", Page 15*
	The appliance feet are not fixed. ▸ Secure the appliance feet. → *"Aligning the appliance", Page 15*
	Transit bolts have not been removed. ▸ → *"Removing the transit bolts", Page 13*.
Drum rotates, water does not flow in.	Load detection is active. ▸ Not a fault – no action required. **Note:** The load detection can take up to two minutes.
Heavy foam build-up	Detergent dosage is too high. ▸ Immediate measure: Mix one tablespoon of fabric softener with 0.5 litres of water and pour the mixture into the compartment for manual dosing (not for outdoor clothing, sportswear or items stuffed with down). ▸ If intelligent dosing is activated, reduce the basic dosage → *Page 37*. ▸ If you dose manually, reduce the amount of detergent for the next washing cycle with the same load.

Fault	Cause and troubleshooting
i-Dos 1 i-Dos 2 cannot be actuated.	Intelligent dosing is not intended for this programme. ▸ Not a fault – no action required. → *"Starting the programme with intelligent dosing system", Page 35*
	Programme progress does not allow intelligent dosing. No remedial action possible.
High spin speed not reached.	A low spin speed is selected. ▸ The next time you run a wash cycle, set a higher spin speed.
	Unbalance load detection system is using a reduced spin speed to eliminate an unbalance. ▸ Redistribute the laundry in the drum. **Note:** Where possible, mix large and small items in the drum. Different sized items of laundry distribute themselves better during the spin cycle. ▸ Start the **Spin** programme.
The spin programme does not start.	Drain pipe or water outlet hose is blocked. ▸ Clean the drain pipe and the water outlet hose.
	Drain pipe or water drain hose is caught or jammed. ▸ Ensure that the drain pipe and water drain hose are not kinked or trapped.
	The unbalanced load detection system has interrupted the spin cycle because the laundry is unevenly distributed. ▸ Redistribute the laundry in the drum. **Note:** Where possible, mix large and small items in the drum. Different sized items of laundry distribute themselves better during the spin cycle. ▸ Start the **Spin** programme.
Rushing, hissing noise.	Water is flushed under pressure into the detergent drawer. ▸ Not a fault – normal operating noise.
Longer, whirring noise before the start of the wash cycle or fabric softening.	Intelligent dosing system dispenses detergent or care products. ▸ Not a fault – normal operating noise.
Brief whirring noise after switching on the appliance.	Intelligent dosing system carries out a function test. ▸ Not a fault – normal operating noise.

Fault	Cause and troubleshooting
Loud noises during the spin cycle.	Appliance is not correctly aligned. ▸ → *"Aligning the appliance", Page 15*
	The appliance feet are not fixed. ▸ Secure the appliance feet. → *"Aligning the appliance", Page 15*
	Transit bolts have not been removed. ▸ → *"Removing the transit bolts", Page 13*.
Banging noises, rattling in the drain pump.	Foreign bodies have got into the drain pump. ▸ → *"Cleaning the drain pump", Page 44*
Slurping, rhythmical suction noise.	The drain pump is active, the detergent solution is pumped out. ▸ Not a fault – normal operating noise.
Creasing.	The spin speed is too high. ▸ The next time you run a wash cycle, set a lower spin speed.
	The load is too large. ▸ The next time you run a wash cycle, reduce the amount of laundry being loaded.
	Unsuitable programme for the type of fabric. ▸ Select the programmes that are suitable for the type of fabric.
The spin result is not satisfactory. The laundry is too wet/too damp.	A low spin speed is selected. ▸ The next time you run a wash cycle, set a higher spin speed. ▸ Start the **Spin** programme.
	Drain pipe or water outlet hose is blocked. ▸ Clean the drain pipe and the water outlet hose.
	Drain pipe or water drain hose is caught or jammed. ▸ Ensure that the drain pipe and water drain hose are not kinked or trapped.
	The unbalanced load detection system has interrupted the spin cycle because the laundry is unevenly distributed. ▸ Redistribute the laundry in the drum. **Note:** Where possible, mix large and small items in the drum. Different sized items of laundry distribute themselves better during the spin cycle. ▸ Start the **Spin** programme.

Fault	Cause and troubleshooting
The spin result is not satisfactory. The laundry is too wet/too damp.	Unbalance load detection system is using a reduced spin speed to eliminate an unbalance. ▸ Redistribute the laundry in the drum. **Note:** Where possible, mix large and small items in the drum. Different sized items of laundry distribute themselves better during the spin cycle. ▸ Start the **Spin** programme.
Detergent residue on the damp washing.	Detergents may contain water-insoluble substances that deposit on the laundry. ▸ Start the **Rinse** programme.
	Unsuitable detergent added to the dispenser of the intelligent dosing system. **1.** Check whether the detergent used is suitable. → *"Detergents and care products", Page 31* **2.** Drain the dispenser. → *"Cleaning the detergent drawer", Page 43* **3.** Clean the dispenser. **4.** Refill the dispenser. → *"Filling the dispensers", Page 36*
	Basic dosage is not correctly adjusted. ▸ If intelligent dosing is activated, reduce the basic dosage → *Page 37*.
Detergent residue on the dry laundry.	Detergents may contain water-insoluble substances that deposit on the laundry. ▸ Brush out the laundry after washing and drying.
	Unsuitable detergent added to the dispenser of the intelligent dosing system. **1.** Check whether the detergent used is suitable. → *"Detergents and care products", Page 31* **2.** Drain the dispenser. → *"Cleaning the detergent drawer", Page 43* **3.** Clean the dispenser. **4.** Refill the dispenser. → *"Filling the dispensers", Page 36*
	Basic dosage is not correctly adjusted. ▸ If intelligent dosing is activated, reduce the basic dosage → *Page 37*.
Insufficient cleaning.	Basic dosage not adjusted. ▸ If intelligent dosing is activated, adjust the basic dosage → *Page 37*.

Fault	Cause and troubleshooting
Insufficient cleaning.	Detergent or care products have congealed in dispensers of the intelligent dosing system. 1. Check whether the detergent used is suitable. → *"Detergents and care products", Page 31* 2. Drain the dispenser. → *"Cleaning the detergent drawer", Page 43* 3. Clean the dispenser. 4. Refill the dispenser. → *"Filling the dispensers", Page 36*
	Unsuitable detergent added to the dispenser of the intelligent dosing system. 1. Check whether the detergent used is suitable. → *"Detergents and care products", Page 31* 2. Drain the dispenser. → *"Cleaning the detergent drawer", Page 43* 3. Clean the dispenser. 4. Refill the dispenser. → *"Filling the dispensers", Page 36*
Home Connect is not working properly.	Different causes are possible. ▸ Go to www.home-connect.com.
No connection to the home network.	Wi-Fi is switched off. ▸ Activating Wi-Fi on the appliance. → *"Activating Wi-Fi on the appliance", Page 39*.
	Wi-Fi is activated but a connection to your home network cannot be established. 1. Ensure that the home network is available. 2. Reconnect the appliance to the home network. → *"Setting up Home Connect", Page 38*
Water is leaking out at the water inlet hose.	Water inlet hose is not correctly/securely connected. 1. Connect the water supply hose correctly. → *"Connecting the water inlet hose", Page 14* 2. Tighten the screw connection.
Water is leaking out at the water outlet hose.	The water outlet hose is damaged. ▸ Replace the damaged water outlet hose.
	Water outlet hose is not connected correctly. ▸ Connect the water outlet hose correctly. → *"Water outlet connection types", Page 15*

Fault	Cause and troubleshooting
Odours have formed in the appliance.	Humidity and detergent residue may promote the formation of bacteria. ▸ → *"Cleaning the drum", Page 42* ▸ If you are not using the appliance, leave the door and detergent drawer open so that residual water can evaporate.
Damp stains have formed on the fabrics after the end of the **smartFinish** programme.	Water droplets from the drum or from the door have moistened the fabrics. The drops come from either condensed steam or the residual moisture from the previous wash programme. ▸ Iron the fabrics or hang them up to dry.
Water is leaking from below the door.	Dirt on the door or seal causes leaks. ▸ Clean the door and the seal.

20.1 Emergency release

Releasing the door

Requirement: The drain pump is empty. → *Page 44*

1. **ATTENTION!** Escaping water may cause material damage.
   - Do not open the door if you can see water through the glass.

   Pull the emergency release downwards with a tool and release.

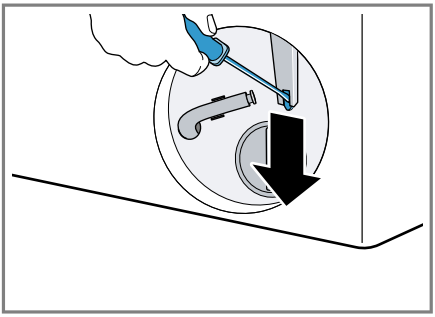

✔ The door lock is released.

2. Insert the maintenance flap and lock it into place.
3. Close the maintenance flap.

21 Transportation, storage and disposal

21.1 Removing the appliance

1. Turn off the tap.
2. Empty the water inlet hose.
3. Put the appliance into standby mode.
   → *"Put the appliance into standby mode", Page 34*
4. Unplug the appliance's mains plug.
5. Drain the water.
   → *"Cleaning the drain pump", Page 44*
6. Detach the hoses.
7. Empty the dispensers.

21.2 Inserting the transit bolts

Secure the appliance before transportation using transit bolts in order to prevent transport damage.

1. Use a screwdriver to remove the 4 cover caps.

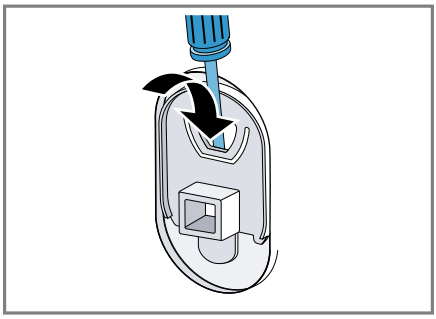

   Keep the cover caps.
2. Insert the 4 transit bolts.
   → *"Removing the transit bolts", Page 13*

21.3 Using the appliance again

- For further information, see
  → *"Installation and connection", Page 12* and
  → *"Starting an empty washing cycle", Page 20*.

21.4 Disposing of old appliance

Valuable raw materials can be re-used by recycling.

⚠ **WARNING**
Risk of harm to health!
Children can lock themselves in the appliance, thereby putting their lives at risk.

- ▸ Do not install the appliance behind a door as this may obstruct the appliance door or prevent it from opening.
- ▸ With redundant appliances, unplug the power cord. Then cut through the cord and damage the lock on the appliance door beyond repair so that the appliance door will no longer close.

1. Unplug the appliance from the mains.
2. Cut through the power cord.
3. Dispose of the appliance in an environmentally friendly manner.

   Information about current disposal methods are available from your specialist dealer or local authority.

This appliance is labelled in accordance with European Directive 2012/19/EU concerning used electrical and electronic appliances (waste electrical and electronic equipment - WEEE). The guideline determines the framework for the return and recycling of used appliances as applicable throughout the EU.

22 Customer Service

Function-relevant genuine spare parts according to the corresponding Ecodesign Order can be obtained from Customer Service for a period of at least 10 years from the date on which your appliance was placed on the market within the European Economic Area.

Note: Under the terms of the manufacturer's warranty the use of Customer Service is free of charge.

Detailed information on the warranty period and terms of warranty in your country is available from our after-sales service, your retailer or on our website.
If you contact Customer Service, you will require the product number (E-Nr.), the production number (FD) and the consecutive numbering (Z-Nr.) of your appliance.
The contact details for Customer Service can be found in the enclosed Customer Service directory or on our website.

22.1 Product number (E-Nr.), production number (FD) and consecutive numbering (Z-Nr.)

You can find the product number (E-Nr.), the production number (FD) and the consecutive numbering (Z-Nr.) on the appliance's rating plate.
Depending on the model, the rating plate is located:

- On the inside of the door.
- On the inside of the maintenance flap.
- On the rear of the appliance.

Make a note of your appliance's details and the Customer Service telephone number to find them again quickly.

22.2 AQUA-STOP guarantee

In addition to warranty claims against the seller under the purchase agreement and in addition to our manufacturer's warranty, we offer compensation under the following conditions.

- If our Aqua-Stop system is defective and causes water damage, we will make good the damage for private users. To ensure protection from water damage, the appliance must be connected to the power supply.
- The liability guarantee is valid for the service life of the appliance.
- A claim can only be made under the guarantee if the appliance has been correctly installed and connected with Aqua-Stop according to our instructions; this also includes correctly fitting the Aqua-Stop extension (genuine accessory). Our guarantee does not cover defective supply lines or fittings up to the Aqua-Stop connection on the tap.
- If your appliance is fitted with Aqua-Stop, you can in principle leave your appliance unattended during operation and the tap turned on afterwards. The tap only needs to be turned off if you are away from home for a long period, e.g. on holiday for several weeks.

23 Consumption values

The following information is provided in accordance with the EU Ecodesign Regulation. The values given for programs other than the **Eco 40-60** are indicative only and were determined in accordance with the applicable standard EN60456. The automatic dosing function has been deactivated for this purpose.
Note on the comparison test: Deactivate the automatic dosing function unless this function is the object of the test.

Programme	Load (kg)	Programme duration (h:min)[1]	Energy consumption (kWh/cycle)[1]	Water consumption (l/cycle)[1]	Maximum temperature (°C) 5 mins[1]	Spin speed (rpm)[1]	Residual moisture (%)[1]
Eco 40-60[2]	10.0	3:55	0.880	68.0	35	1509	47.00
Eco 40-60[2]	5.0	2:50	0.490	52.0	28	1600	43.00
Eco 40-60[2]	2.5	2:30	0.280	35.0	23	1600	42.50
Cottons 20 °C	10.0	3:39	0.500	95.0	25	1600	42.00
Cottons 40 °C	10.0	3:30	1.320	95.0	44	1600	42.00
Cottons 60 °C	10.0	3:18	2.100	95.0	61	1600	42.00
Cottons 40 °C + Prewash	10.0	4:20	1.500	115.0	42	1600	42.00
Easy Care 40 °C	4.0	2:29	0.780	45.0	44	1200	32.00
Mixed Fabrics 40 °C	4,0	1:00	0.670	42.0	42	1400	50.00
Wool 30 °C	2,0	0:41	0.210	40.0	24	800	27.00

[1] Due to the influence of water pressure, hardness and inlet temperature, ambient temperature, type, amount and soiling of laundry, detergent used, fluctuations in the power supply and the selected additional functions, the actual values may deviate from the stated values.
[2] Test programme in accordance with the EU Ecodesign Directive and the EU Energy Labelling Regulation with cold water (15 °C).

24 Technical data

Appliance height	84.5 cm
Appliance width	59.8 cm
Appliance depth	59.0 cm
Appliance depth with door closed	63.8 cm
Appliance depth with door open	109.0 cm
Weight	82.6 kg
Maximum load	10.0 kg
Mains voltage	220-240 V, 50-60 Hz
⊟ Minimum installation protection	10A
Nominal power	2300 W
Power consumption	▪ Standby mode: 0.50 W ▪ Left-on mode: 0.50 W ▪ Time until the networked standby mode is set (Wi-Fi): 5 mins ▪ Networked standby mode (Wi-Fi): 2.00 W
Water pressure	▪ Minimum: 100 kPa (1 bar) ▪ Maximum: 1000 kPa (10 bar)
Length of the water inlet hose	150 cm
Length of the water outlet hose	150 cm
Length of the power cord	160 cm

This product contains light sources from energy efficiency class F. These light sources are available as a spare part and must only be replaced by trained specialist staff.
You can find more information about your model online at https://eprel.ec.europa.eu/[1]. This web address is linked to the official EU EPREL product database. Please then follow the instructions on searching for the model. The model identifier is made up of the characters before the slash in the product number (E-Nr.) on the rating plate. Alternatively, you can also find the model identifier in the first line of the EU energy label.

24.1 Information regarding Free and Open Source Software

This product includes software components that are licensed by the copyright holders as free or open source software.
The applicable licence information is stored on your home appliance. You can also access the applicable licence information via your Home Connect app: "Profile -> Legal information -> Licence Information".[2]
You can download the licence information on the brand product website. (Please search on the product website for your appliance model and additional documents). Alternatively, you can request the relevant information from oss-

[1] Only applies to countries in the European Economic Area

[2] Depending on the appliance specifications

request@bshg.com or BSH Hausgeräte GmbH, Carl-Wery-Str. 34, 81739 Munich, Germany.
The source code will be made available to you on request.
Please send your request to ossrequest@bshg.com or BSH Hausgeräte GmbH, Carl-Wery-Str.34, 81739 Munich, Germany.
Subject: „OSSREQUEST“
The cost of performing your request will be charged to you. This offer is valid for three years from the date of purchase or at least as long as we offer support and spare parts for the relevant appliance.

25 Declaration of Conformity

BSH Hausgeräte GmbH hereby declares that the appliance with Home Connect functionality conforms to the essential requirements and other relevant provisions of Directive 2014/53/EU.
A detailed RED Declaration of Conformity can be found online at siemens-home.bsh-group.com among the additional documents on the product page for your appliance.

Hereby, BSH Hausgeräte GmbH declares that the appliance with Home Connect functionality is in compliance with relevant statutory requirements.[1]
A detailed Declaration of Conformity can be found online at siemens-home.bsh-group.com/uk/ among the additional documents on the product page for your appliance.[1]

UK CA

2.4 GHz band (2400–2483.5 MHz): Max. 100 mW
5-GHz band (5150–5350 MHz + 5470–5725 MHz): max. 150 mW

[1] Only applies to Great Britain

!	BE	BG	CZ	DK	DE	EE	IE	EL	ES
	FR	HR	IT	CY	LI	LV	LT	LU	HU
	MT	NL	AT	PL	PT	RO	SI	SK	FI
	SE	NO	CH	TR	IS	UK (NI)			
5 GHz WLAN (Wi-Fi): For indoor use only.									

AL	BA	MD	ME	MK	RS	UK	UA
5 GHz WLAN (Wi-Fi): For indoor use only.							

BSH Hausgeräte GmbH
Carl-Wery-Straße 34
81739 München, GERMANY
siemens-home.bsh-group.com

Valid within Great Britain:
Imported to Great Britain by
BSH Home Appliances Ltd.
Grand Union House
Old Wolverton Road
Wolverton, Milton Keynes
MK12 5PT
United Kingdom

Manufactured by BSH Hausgeräte GmbH under the trademark licence of Siemens AG

9001819869 (030310)
en