DHT71EUK-1

Freestanding Heat Pump Condenser Dryer, White
Energy Efficiency Class: A+
EAN13: 8017709211455

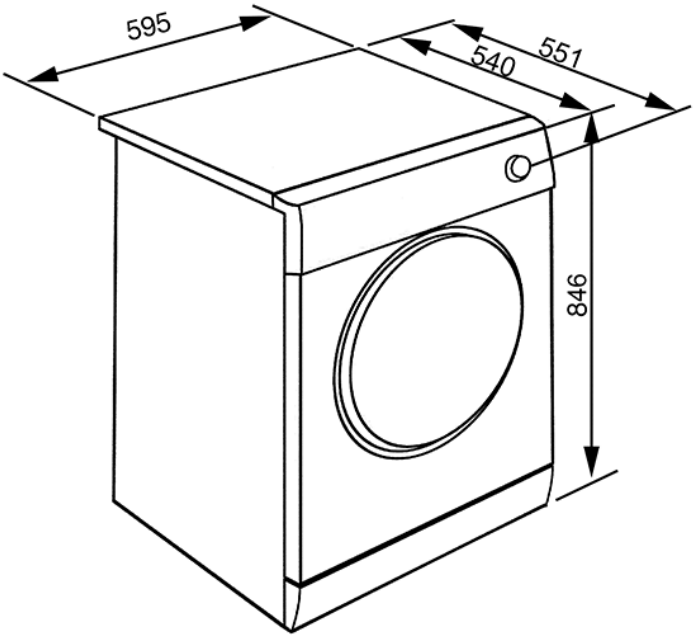

•

• Display: Delay timer (24hrs), Rest time indication, Visualisation of the selected options • 16 programmes • Special programs: Refresh, Delicates, Shirts, Gym, Quick • 45 min • Additional options: easy iron, cooling down • Max drying capacity: 7 kg • Humidity sensor (auto programmes) • **Heating pump system** • Internal light • St/steel drum • Extra large 340 mm porthole • Child lock (programme lock) • Transparent door • Consumption: • For complete 7 kg, energy: 2.29 kW/h • Annual energy consumption: 276 kW/h • Noise level: 66 dB (A) Re 1 pW

Smeg (UK) Ltd - The Magna Building, Wyndyke Furlong, Abingdon - OX14 1DZ - Tel. +44 (0)844 557 9907 - Fax +44 (0)844 557 9337